MINERVA

A new X-ray facility for the characterization of the newATHENA mirror modules at the ALBA Synchrotron

Antonio Carballedo Costa
07 / 11 / 2023

INDEX

- ATHENA X-Ray Observatory
- Beamline Layout and General description
- Monochromator
- Sample Environment
- Detector Tower
- Conclusions

NewATHENA X-ray Telescope

- Open observatory to address **fundamental questions about energetic objects.**
- Mission **started** at **2014,** expected to be **ready** by **2037**
- Powerful X-ray observatory - unprecedented combination of **collecting area**, survey capabilities and energy resolution.
- 14,5 m long, 7 tones

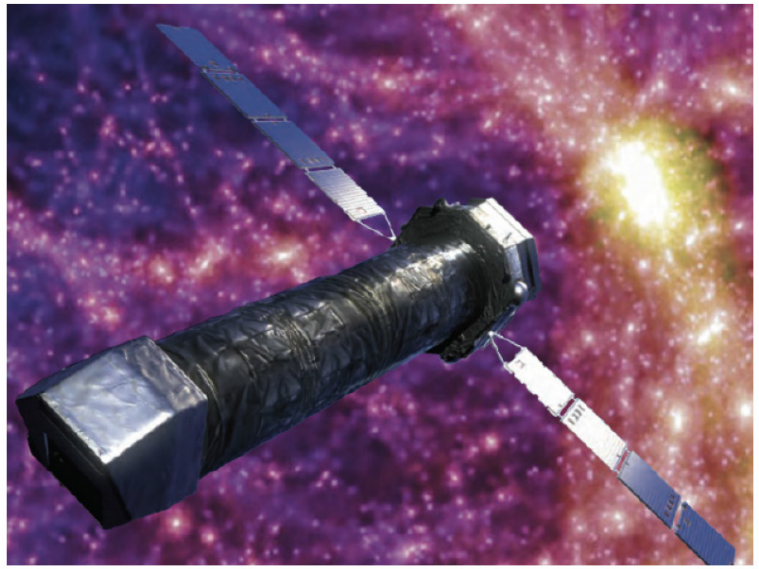

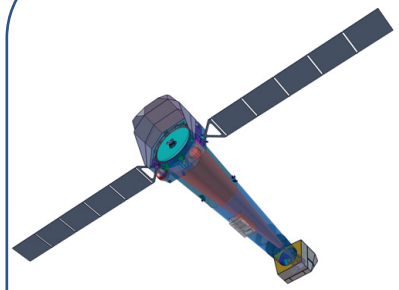

NewATHENA X-ray Telescope

Silicon Pore Optics

SPO

cosine measurement systems

Optics manufacturer

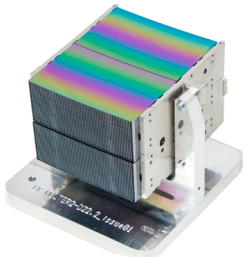

NewATHENA X-ray Optics

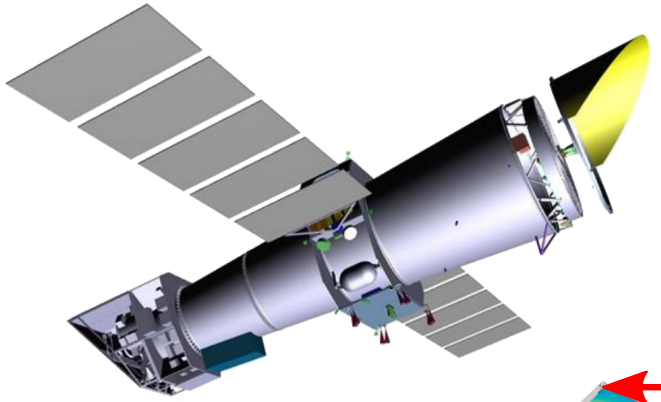

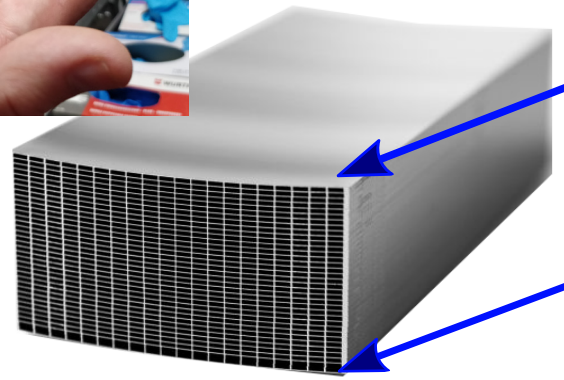

Single Stack

36 Silicon plates

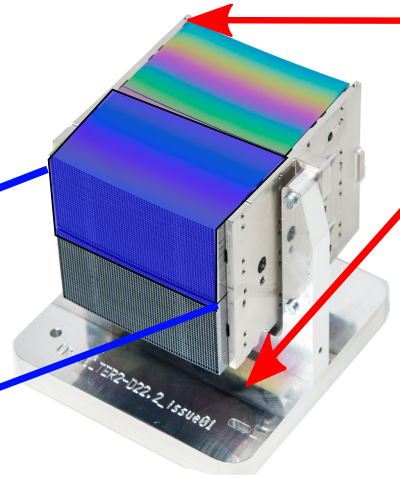

Mirror Module

4 stacks

Complete Optic

500-600 Mirror modules

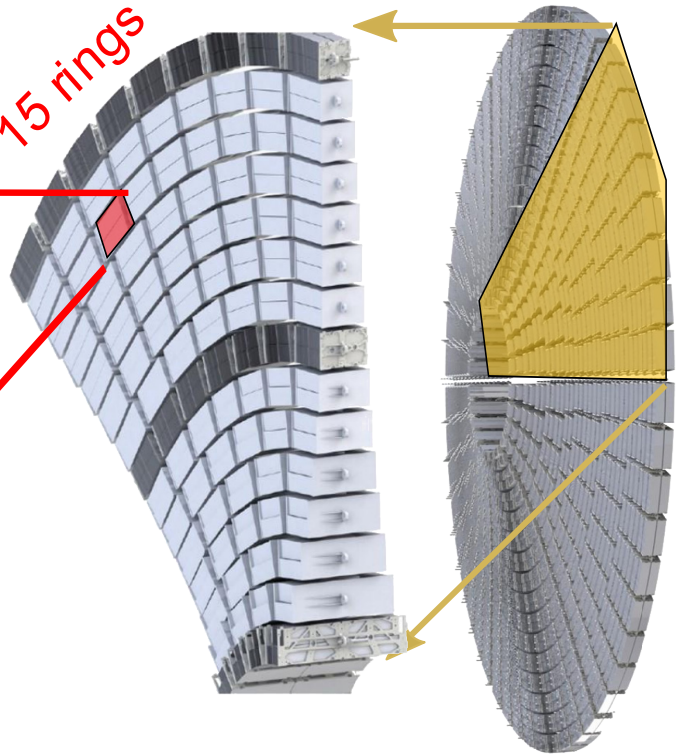

GENERAL BEAMLINE DESCRIPTION

MINERVA Beamline

- Based on **XPBF 2.0** (PTB)
- Source: **Bending magnet**
- Operated under UHV and HV.
- **Monochromator**, unique optics (Toroidal mirror → Collimated beam at 1 KeV)
- **Sample Environment** in a Cleanroom (30 m^2)
- **Detector Tower**

Technical Specifications

- **Accuracy** in **distance from MM to Detector** better than **50 µm**.
- **Positioning and stability** of MM better than **1 µm** and **1 arcsec**

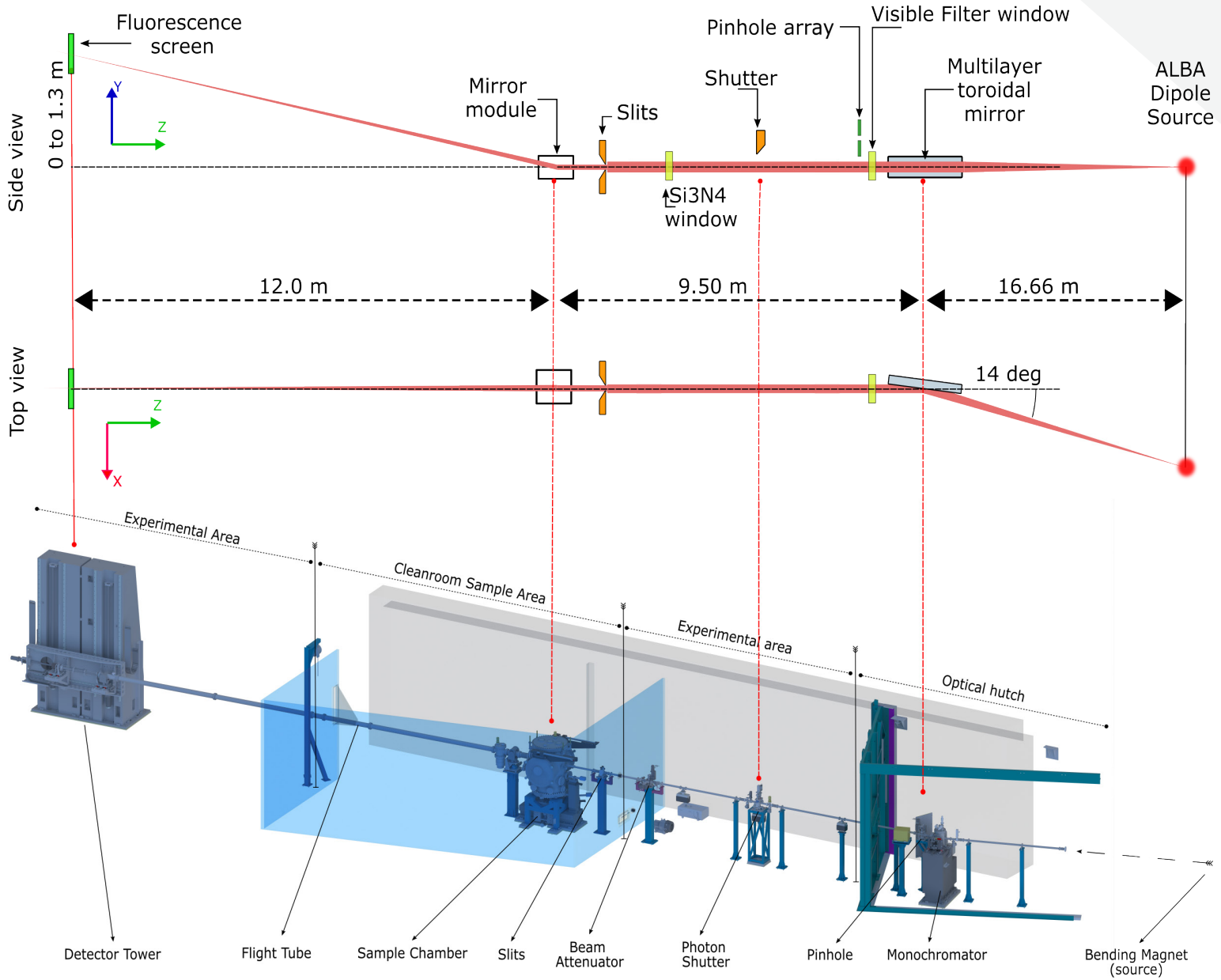

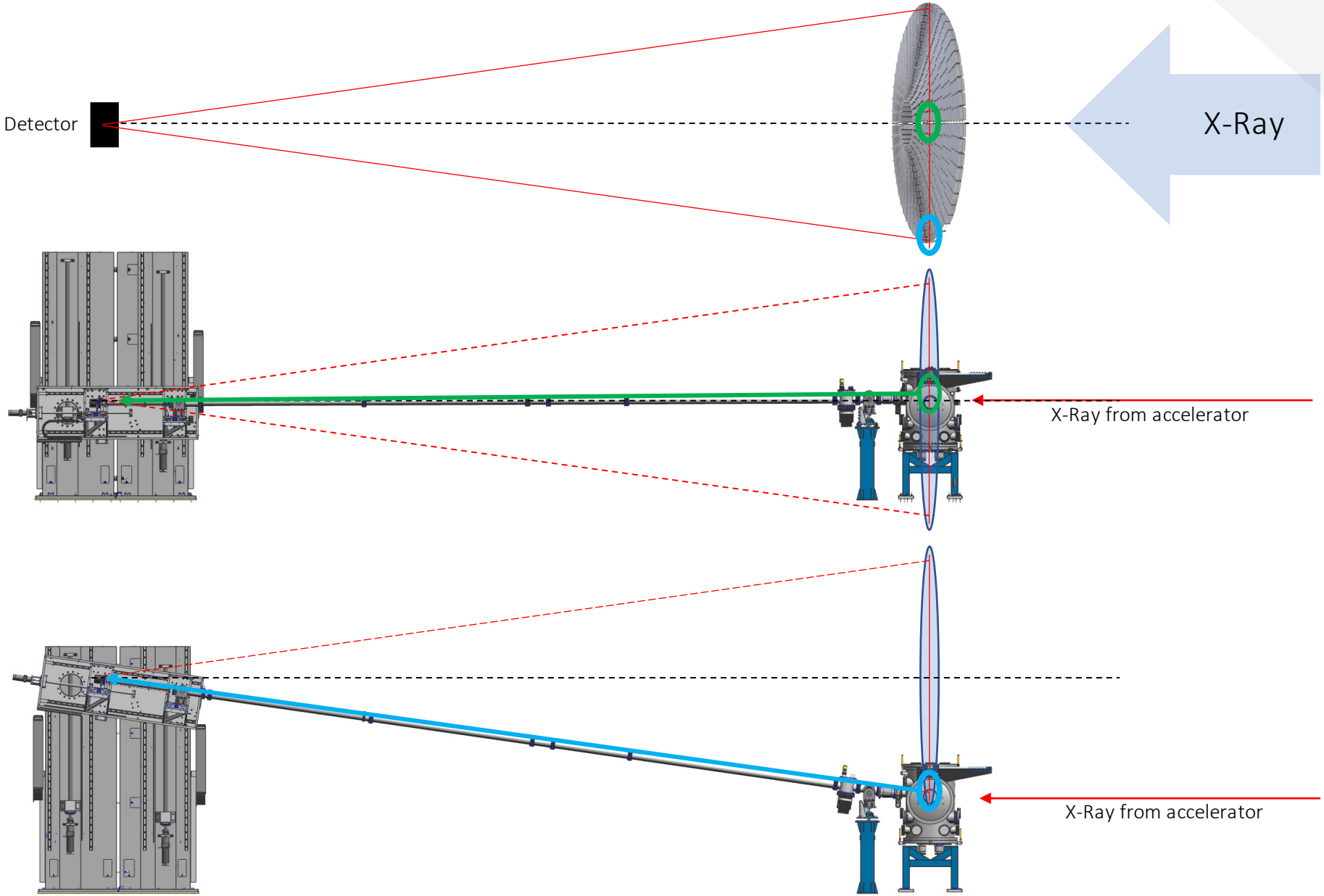
Detector
X-Ray
X-Ray from accelerator
X-Ray from accelerator

MONOCHROMATOR

MIRROR ASSEMBLY

- **Toroidal mirror** (SESO) with Multilayer (AXO DRESDEN)
- Select photons at **1KeV**. Collimated beam
- **Water cooling** by copper cooling pads
- Kinematical mount as a mirror base to manual alignment

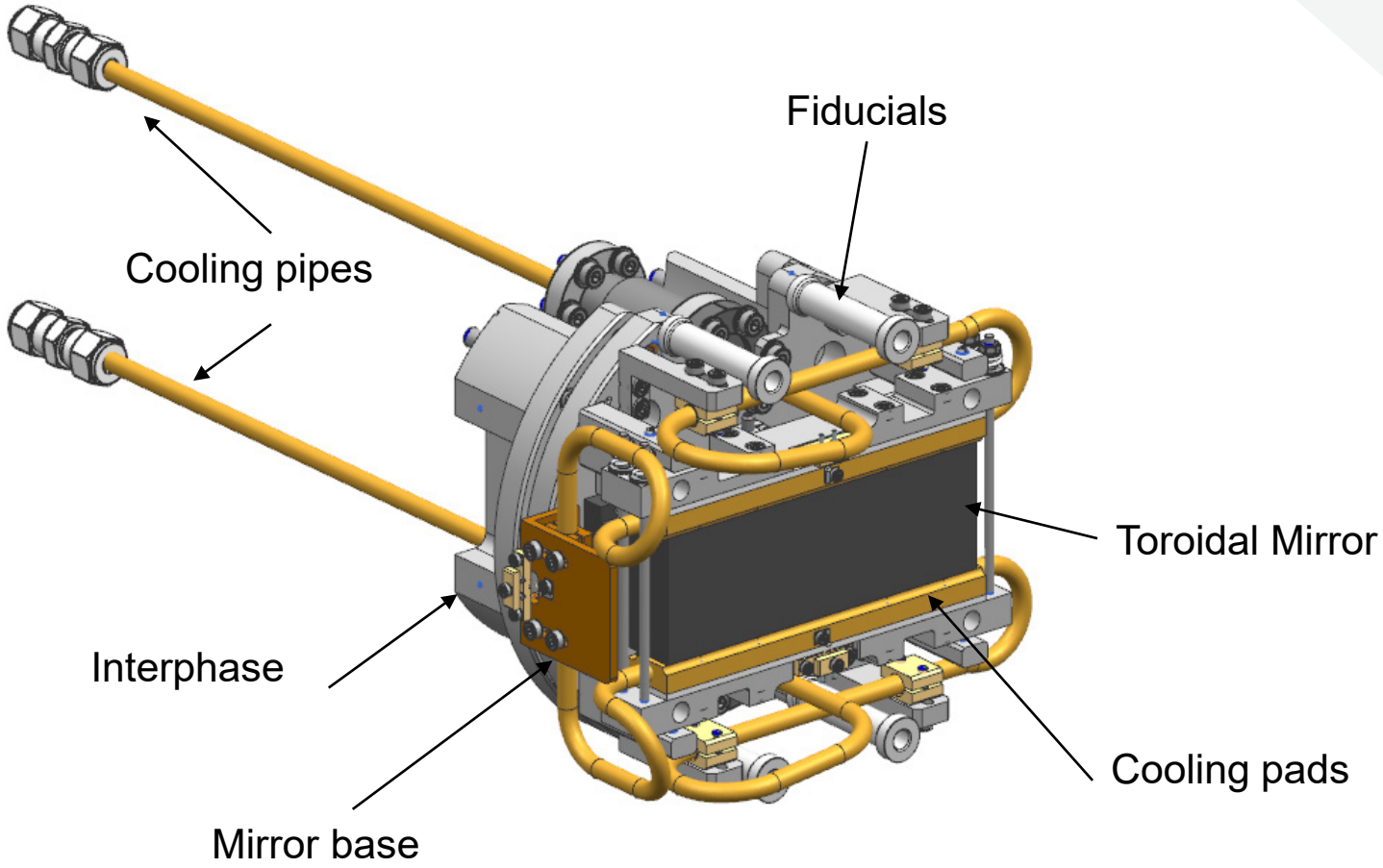

MONOCHROMATOR

MOTION STAGES

- Motorized stages: **X-ray incidence** and **linear translation** normal to surface
- Based on **stepper motors** and precision **ball linear guides**
- Feedback control by means of **absolute encoders**

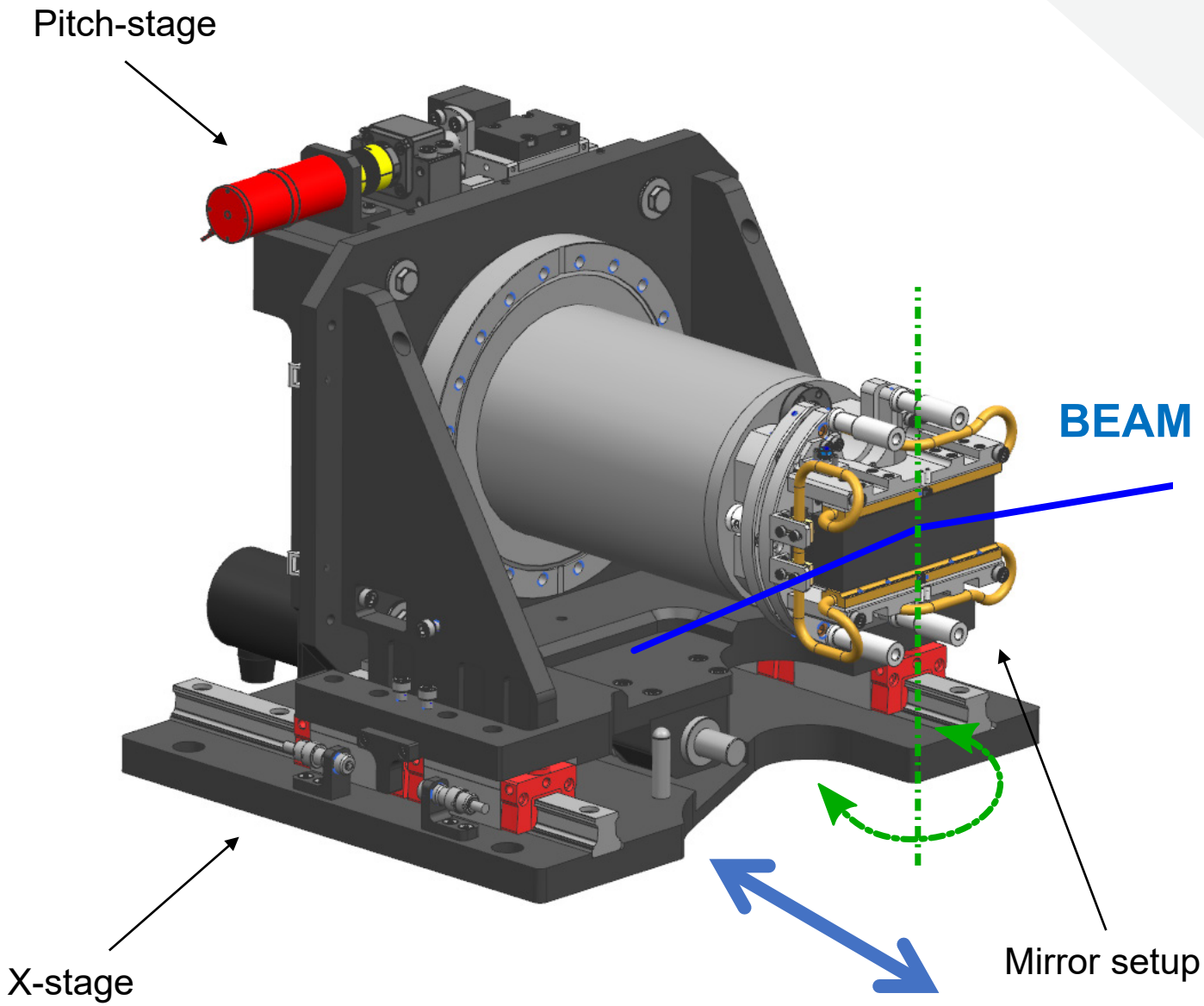

MONOCHROMATOR

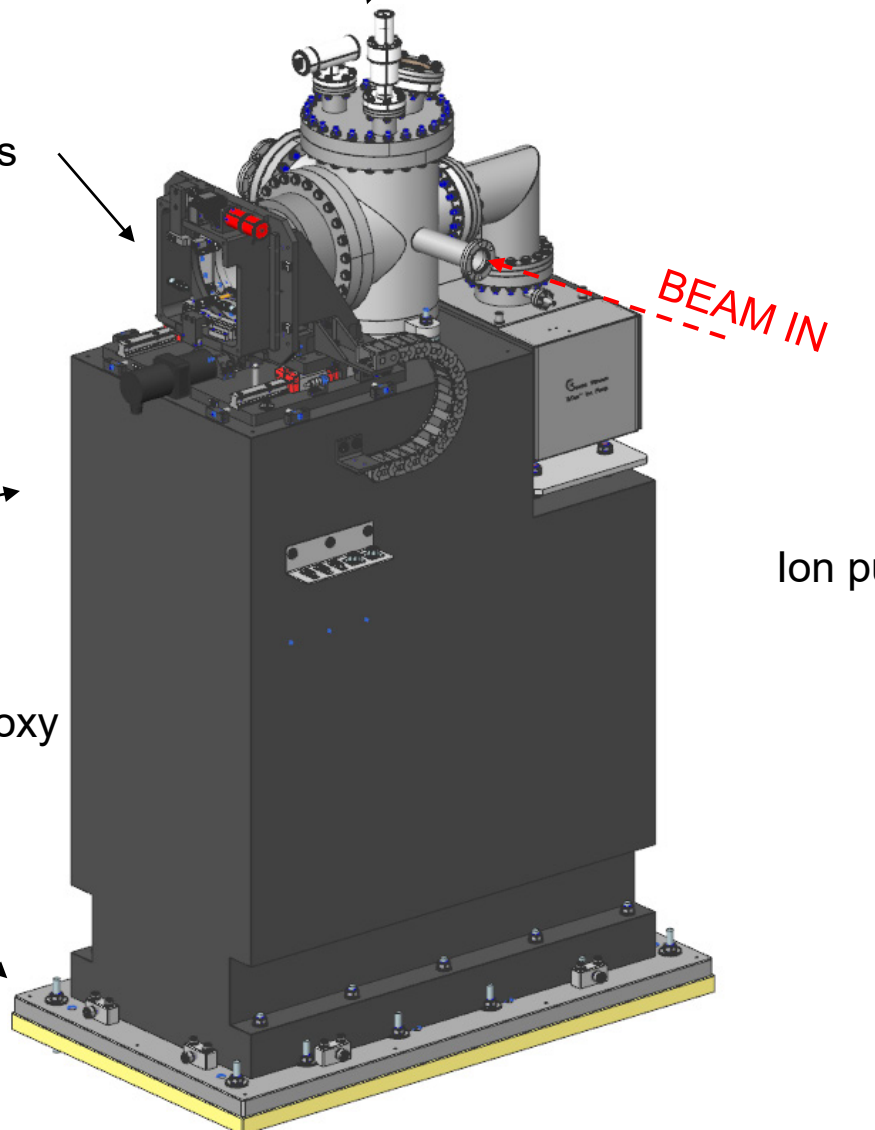

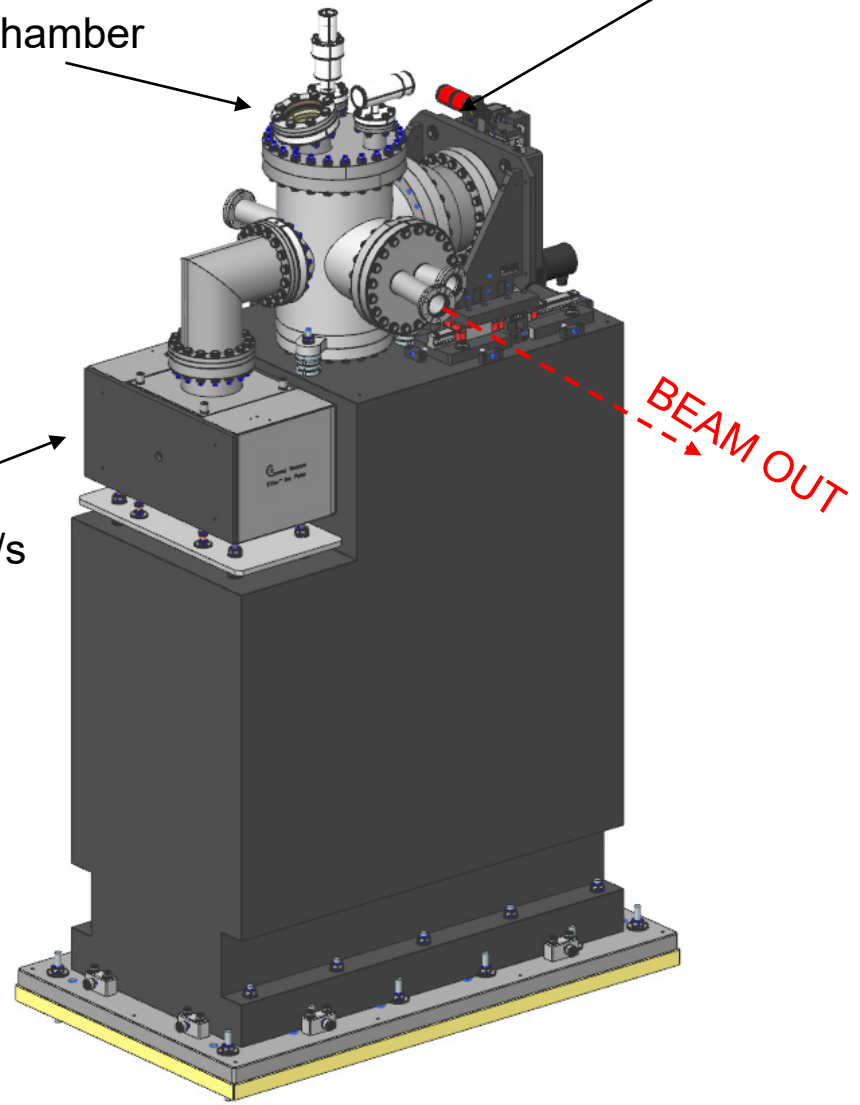

MONOCHROMATOR

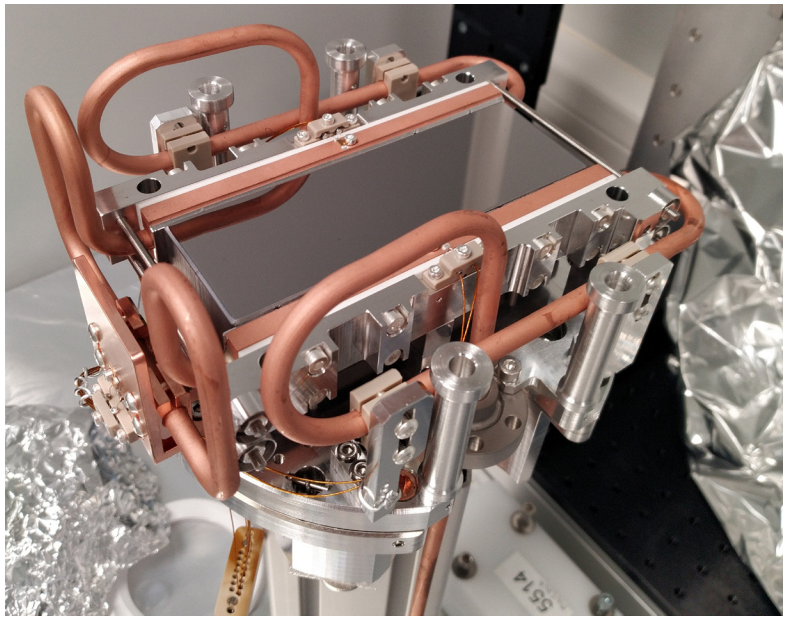

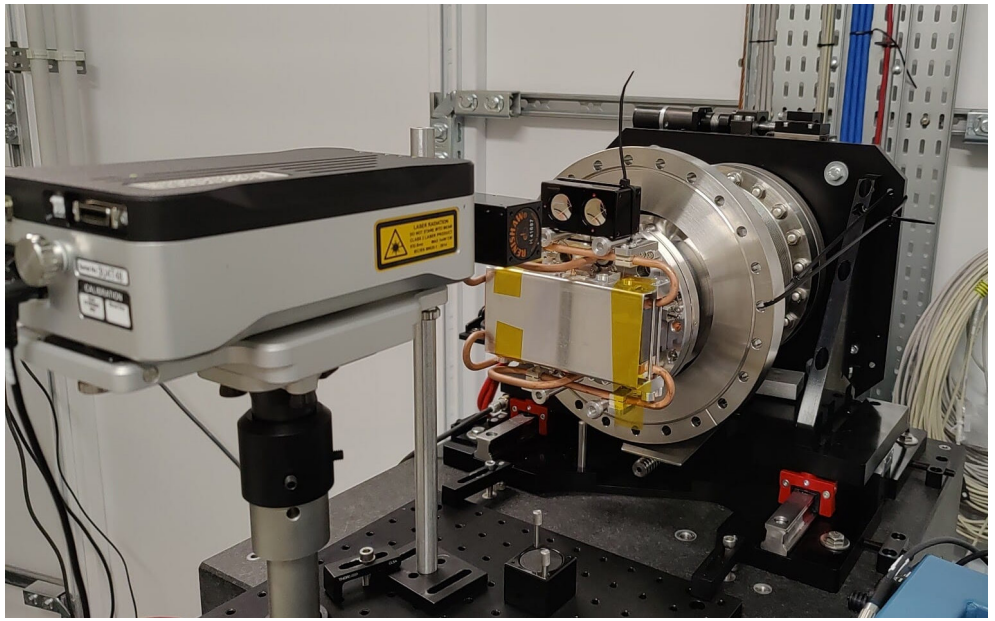

Pitch Rotation

Parameter	Performance
Stroke	≥(± 12 mrad)
Motion Resolution	≤0.5 µrad
Repeatability (open Loop)	≤1 µrad
Backlash (open Loop)	≤20 µrad

Linear Translation (normal to mirror surface)

Parameter	Performance
Stroke	≥(± 5 mm)
Motion Resolution	≤0.4 µm
Repeatability (open Loop)	≤0,5 µm
Backlash (open Loop)	≤6,5 µm
Linearity (open Loop)	≤1,2 µm

SAMPLE ENVIRONMENT

- 30 m^2 cleanroom
- Where the **mirror modules** are **aligned** and **characterized**

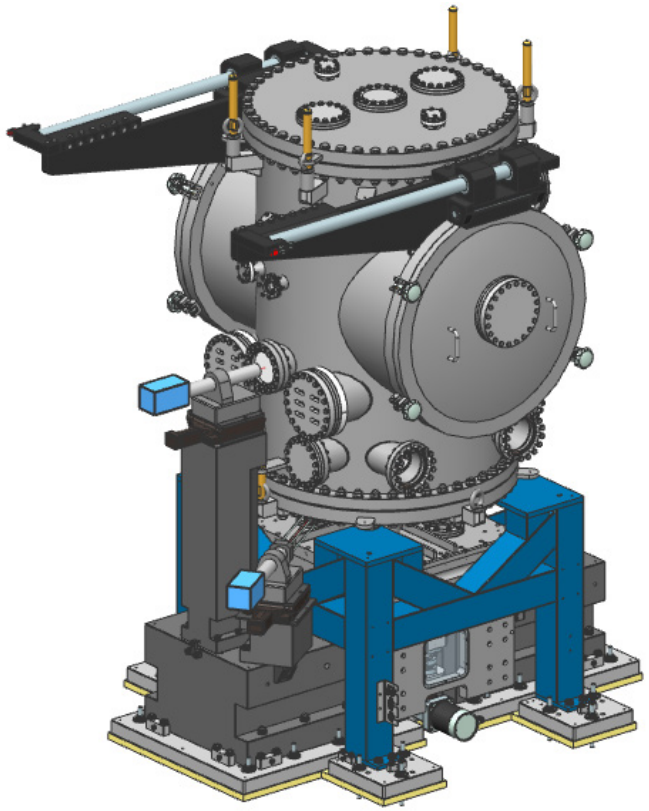

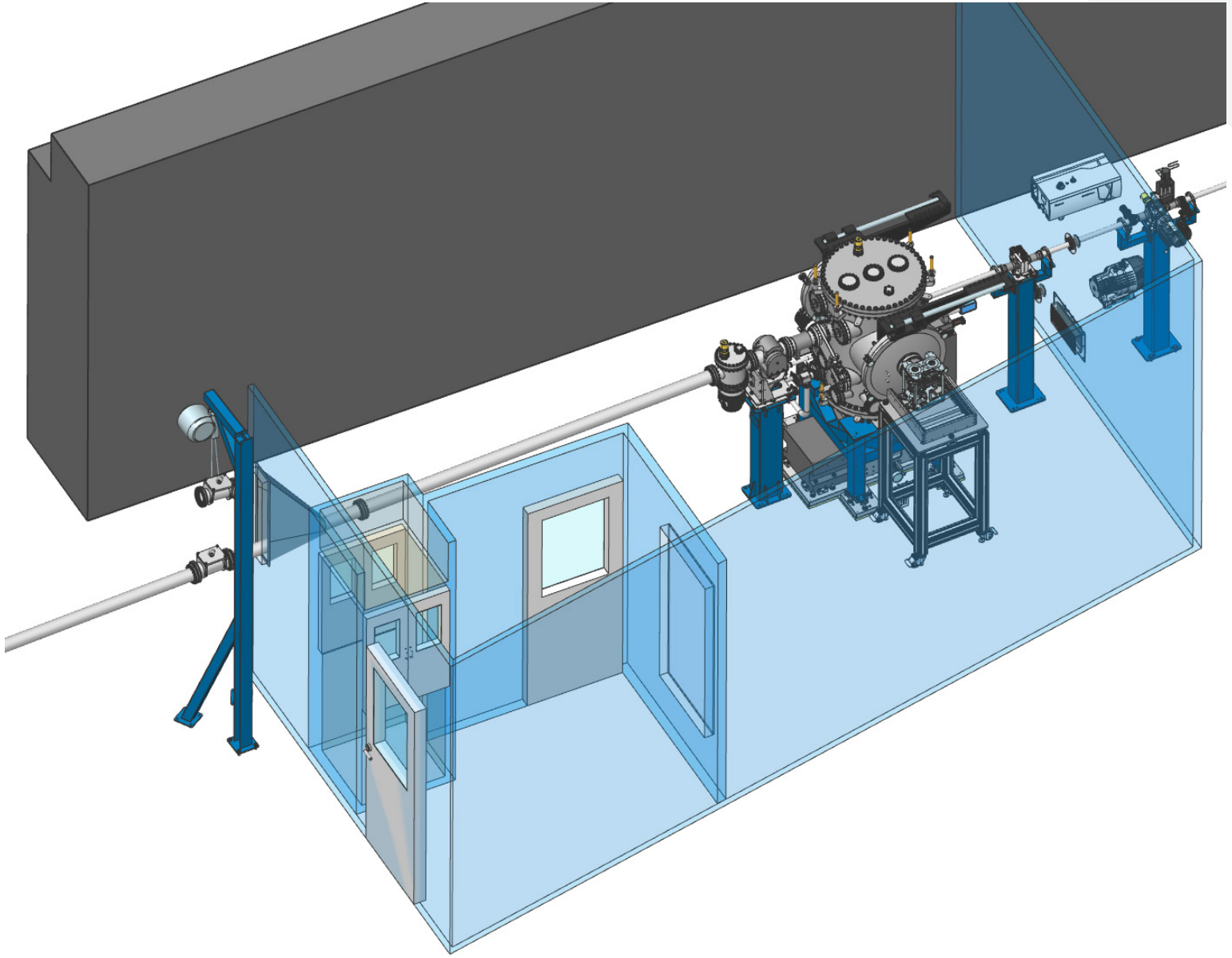

SAMPLE ENVIRONMENT

HV HEXAPOD

Horizontal +/- 50mm

Vertical +/- 25 mm

Rotation Z +/- 20 deg

Rotation X/Y +/- 10 deg

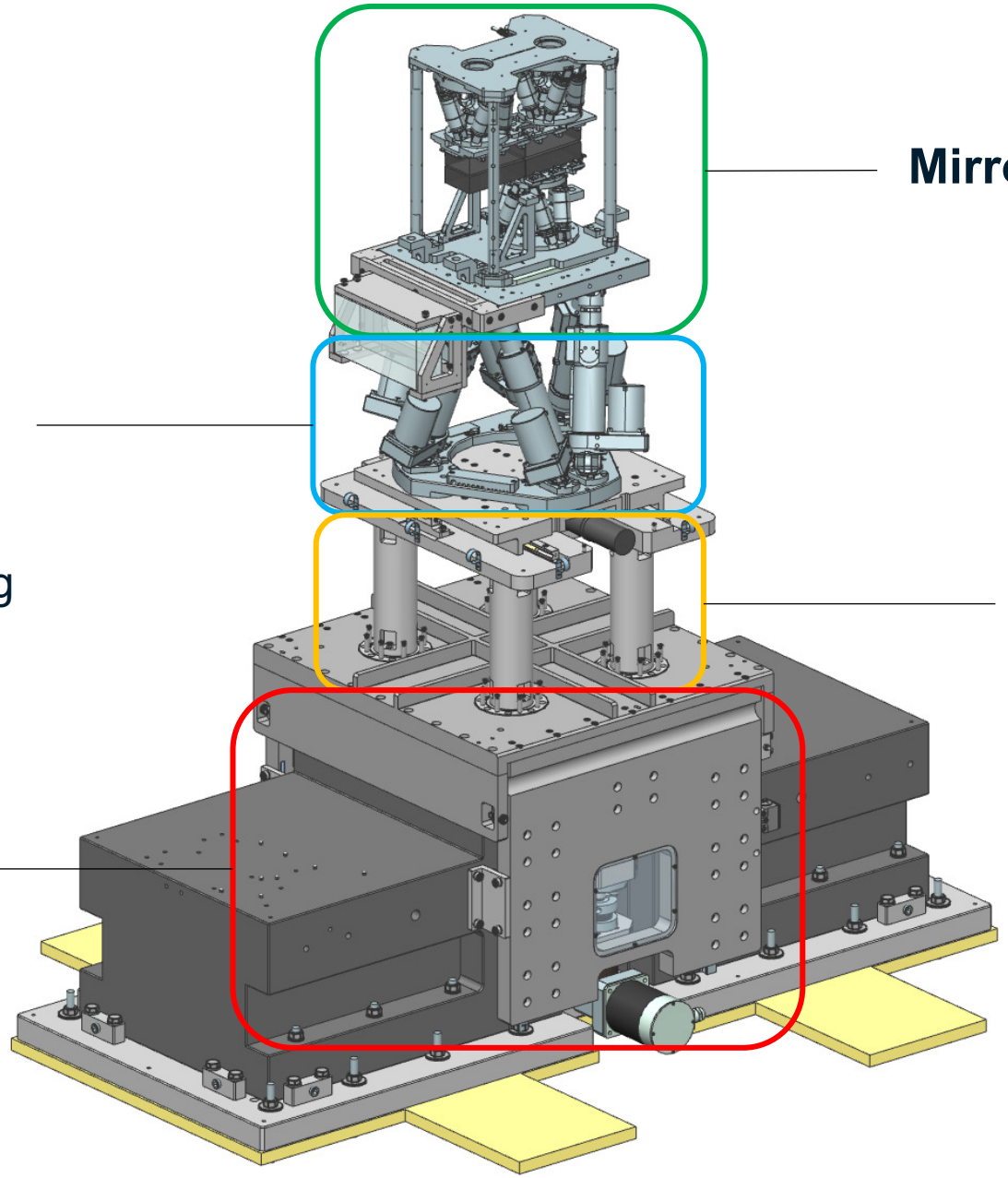

Mirror Module

JIG

In Vacuum

Horizontal Stage

Stroke +/- 70 mm

In Air

Vertical Stage

Stroke +/- 35 mm

SAMPLE ENVIRONMENT

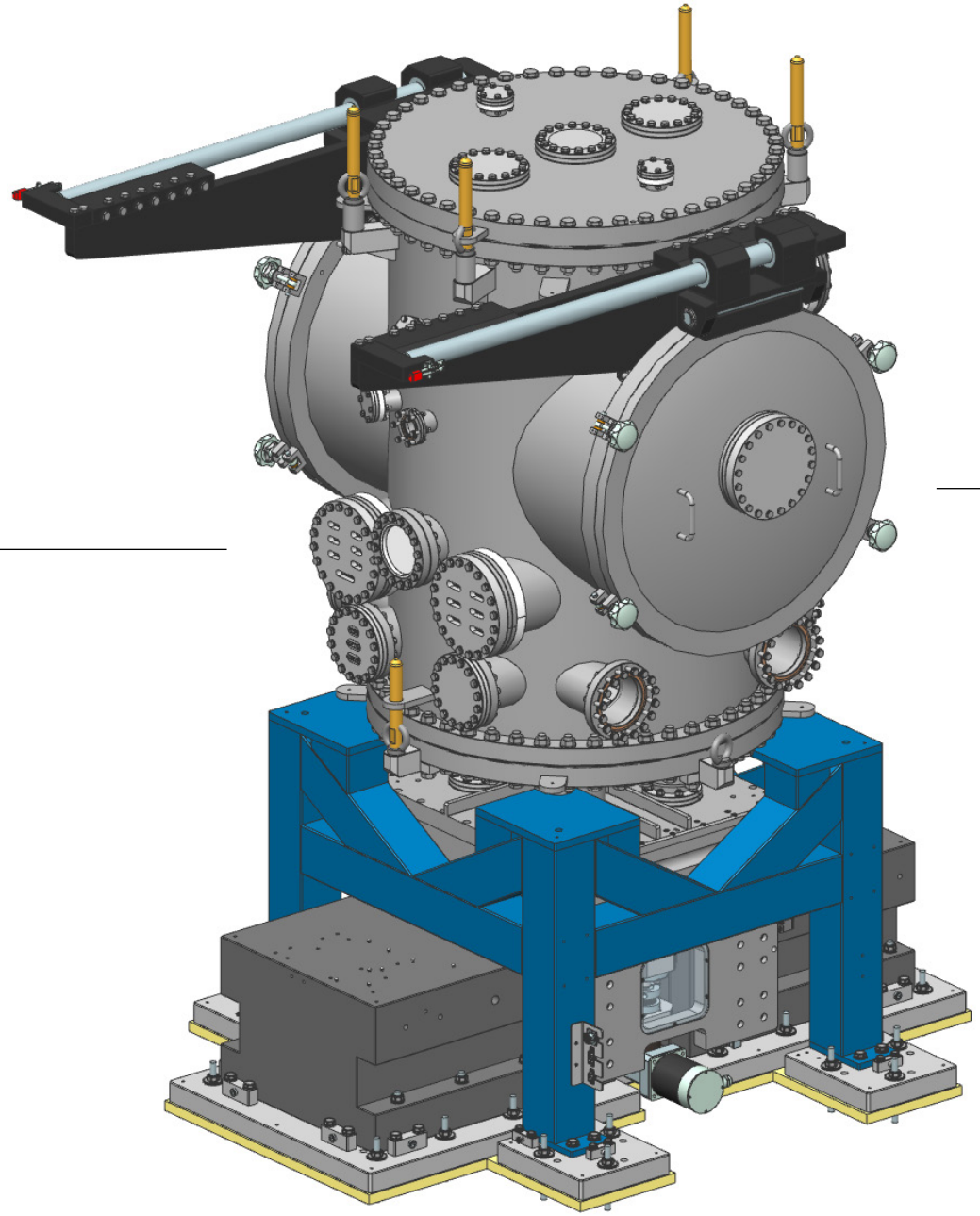

Vacuum Chamber

Required vacuum level

10^{-5} mbar

Quick access doors

Manipulation of Mirror Modules

SAMPLE ENVIRONMENT

Two autocollimators → Constant knowledge of the orientation

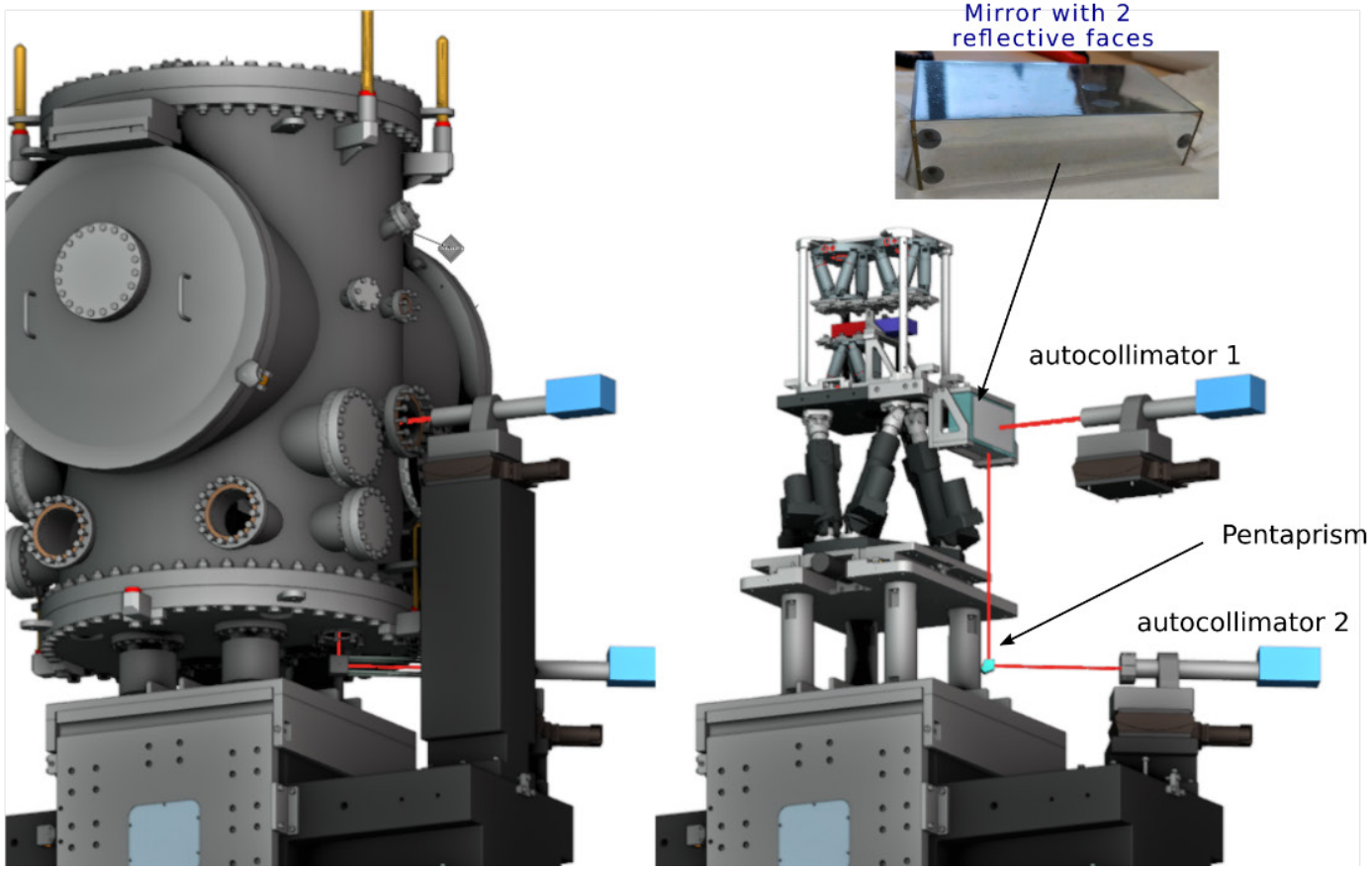

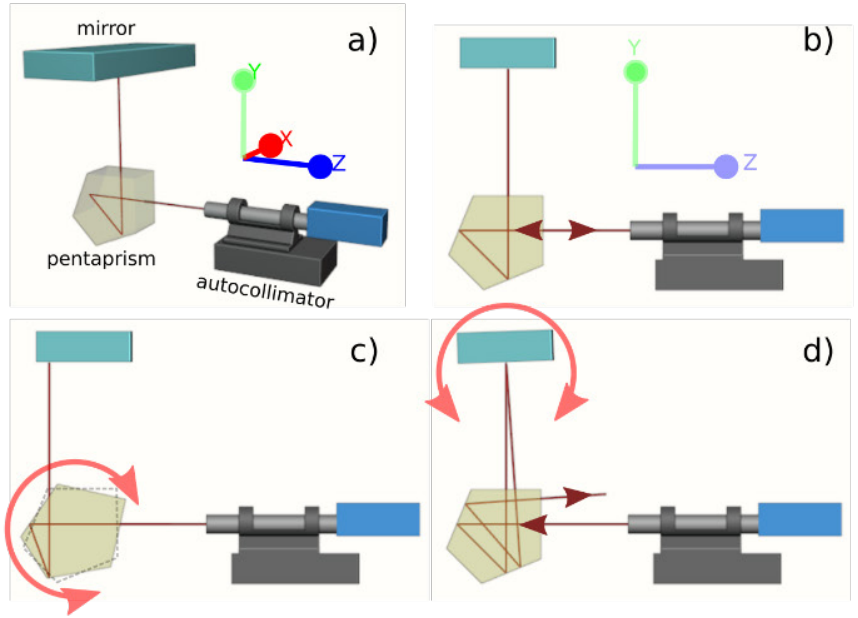

SAMPLE ENVIRONMENT

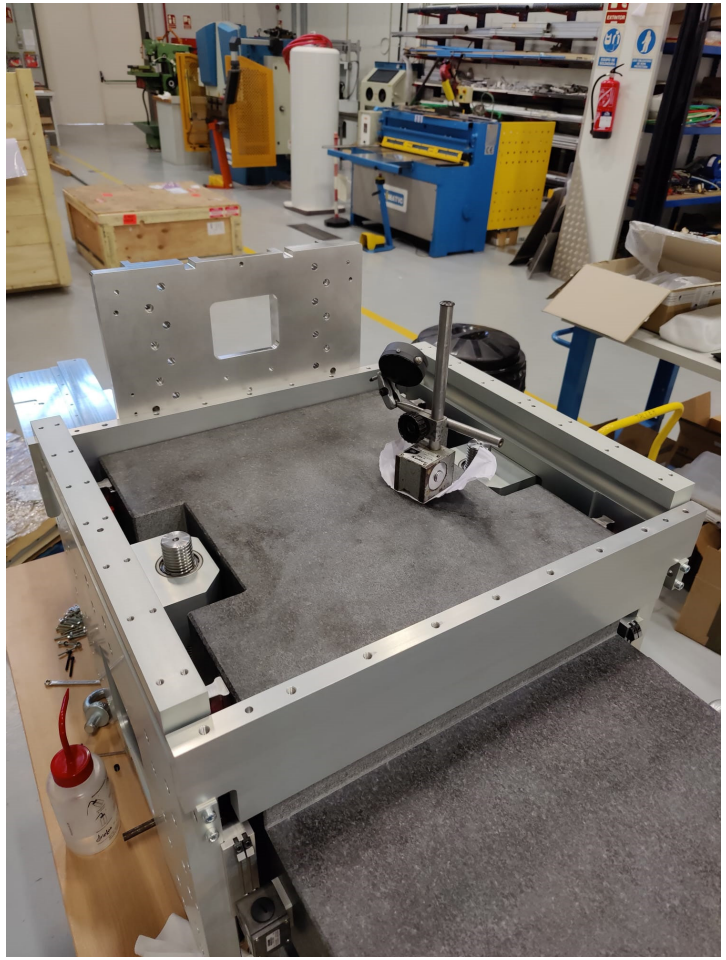

Results on Motion – Vertical Stage

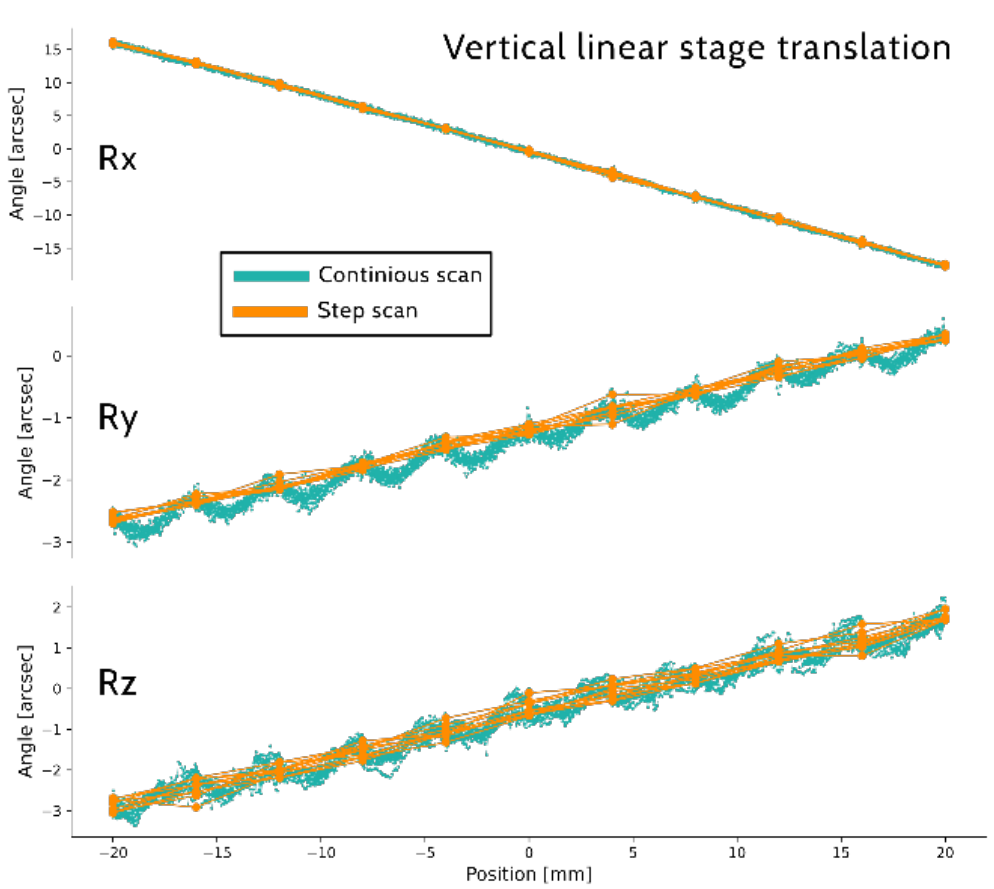

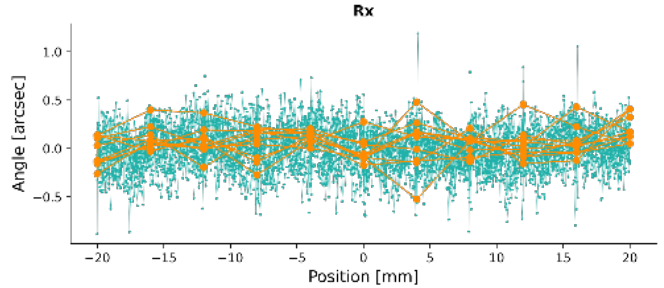

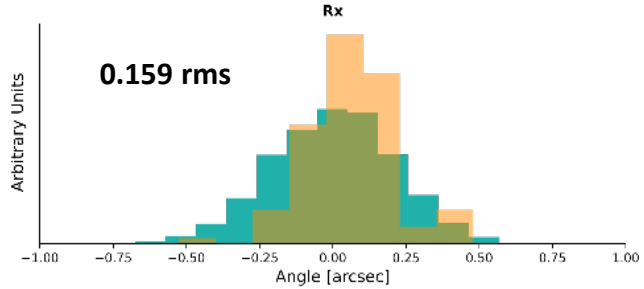

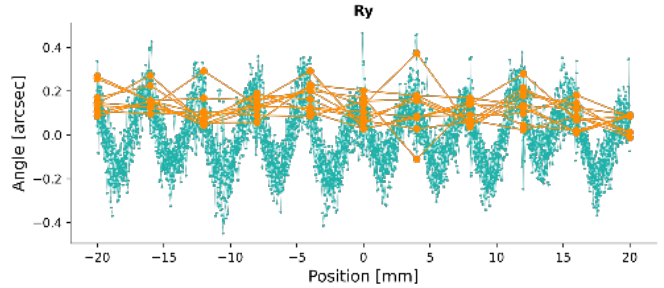

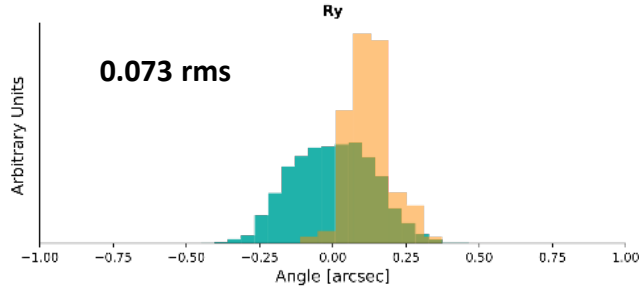

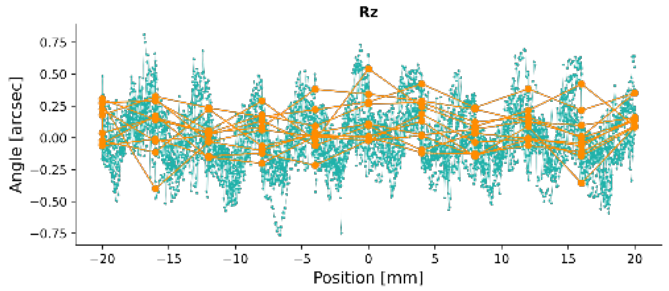

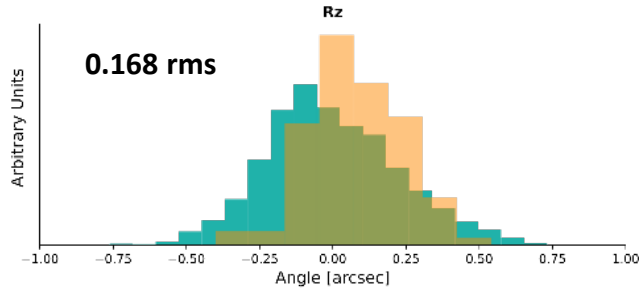

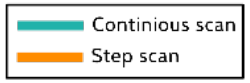

Vertical linear stage translation

SAMPLE ENVIRONMENT

Results on Motion – Horizontal Stage

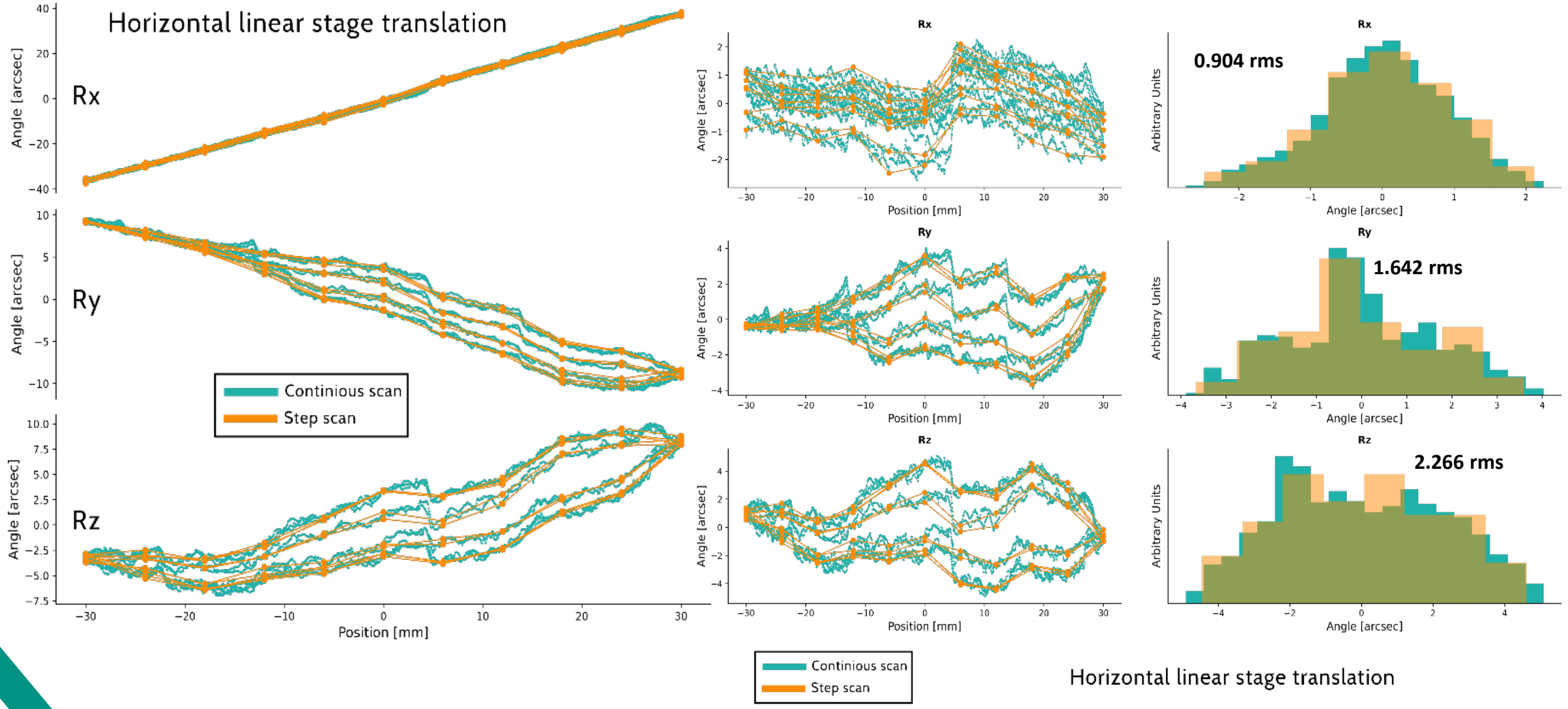

Results on Motion – Hexapod Vertical

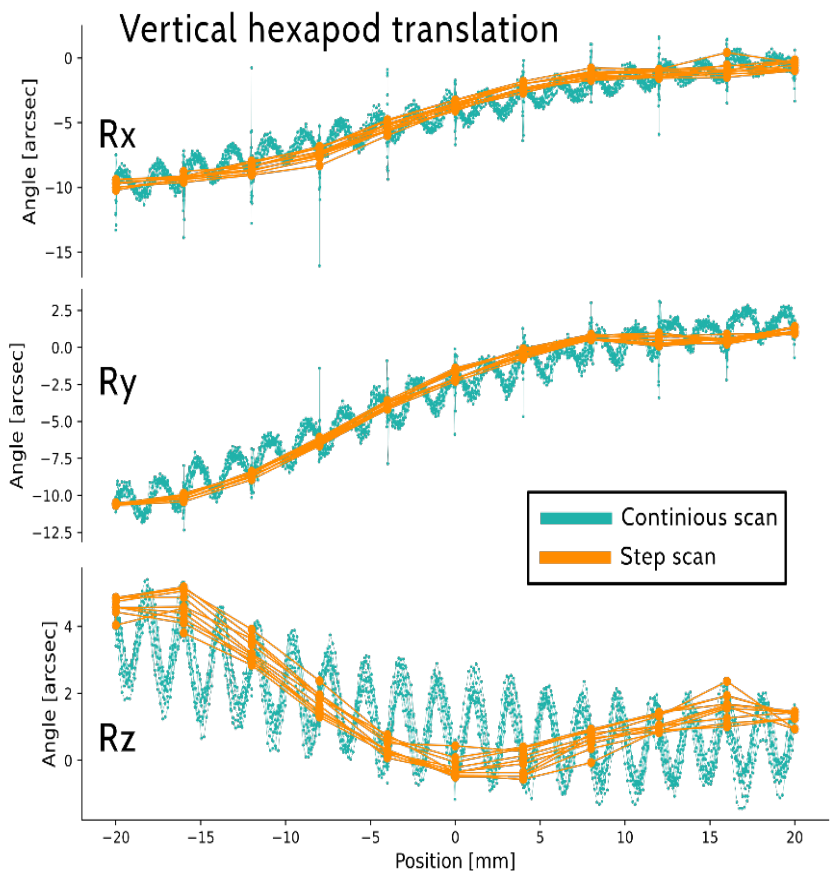

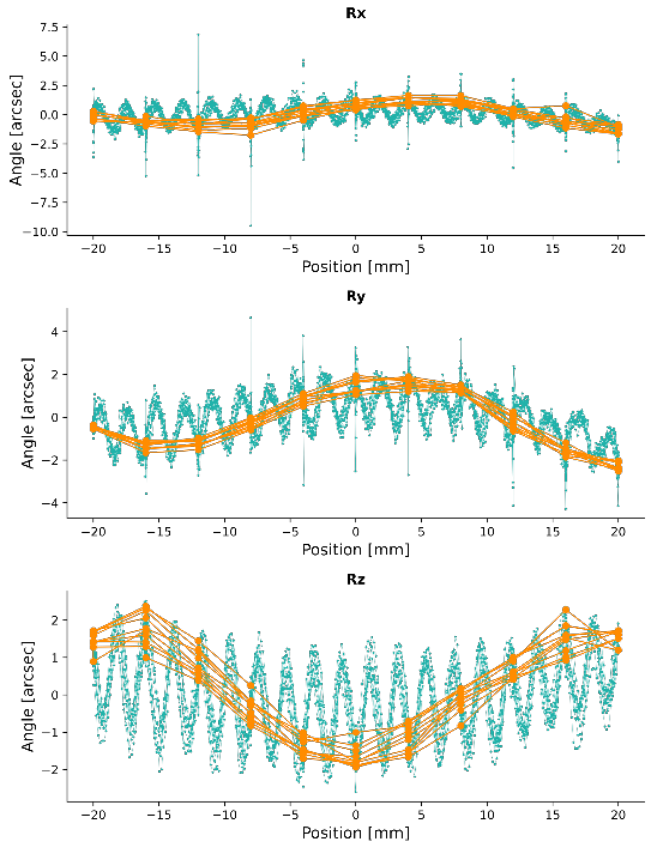

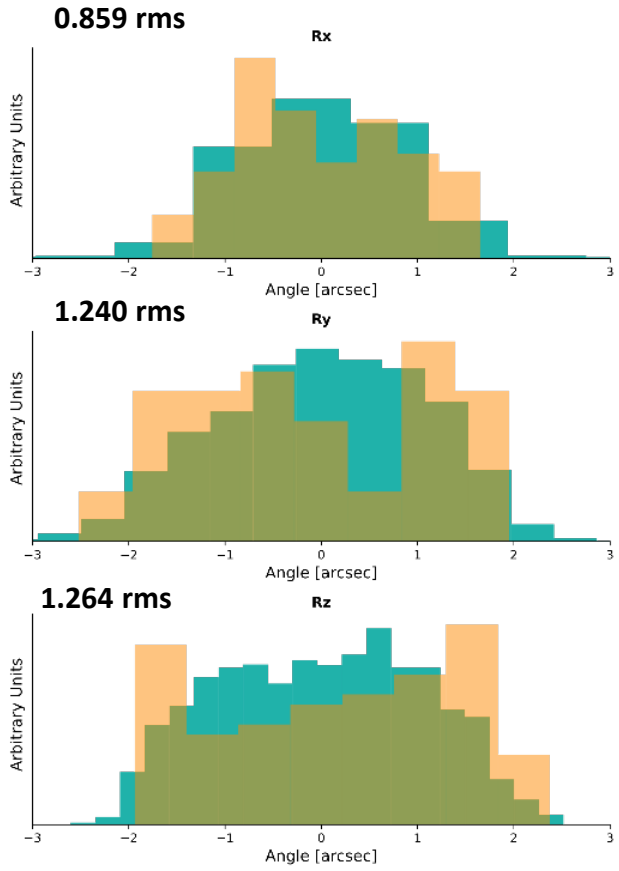

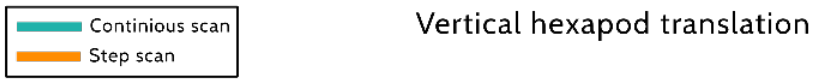

Vertical hexapod translation

Results on Motion – Hexapod Horizontal

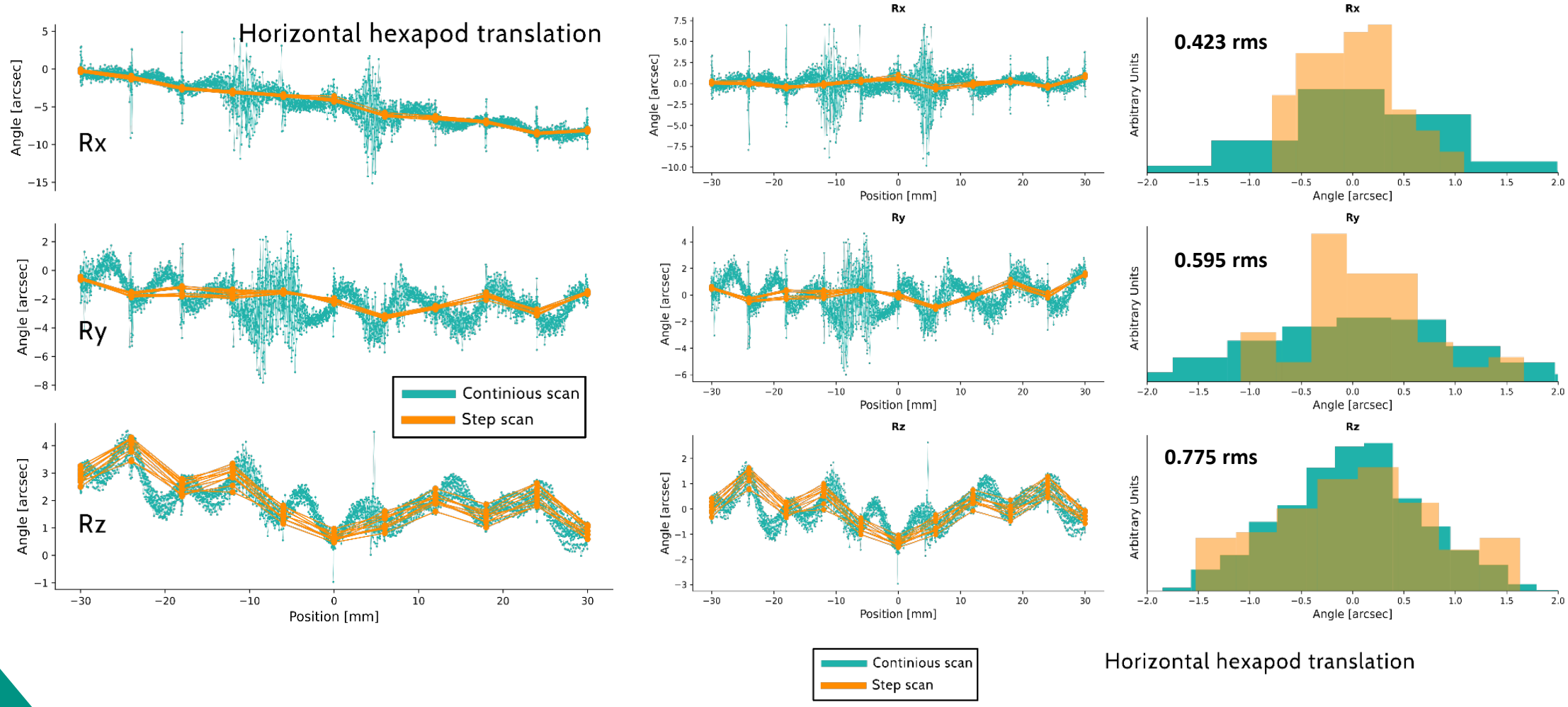

SAMPLE ENVIRONMENT

Results on stability

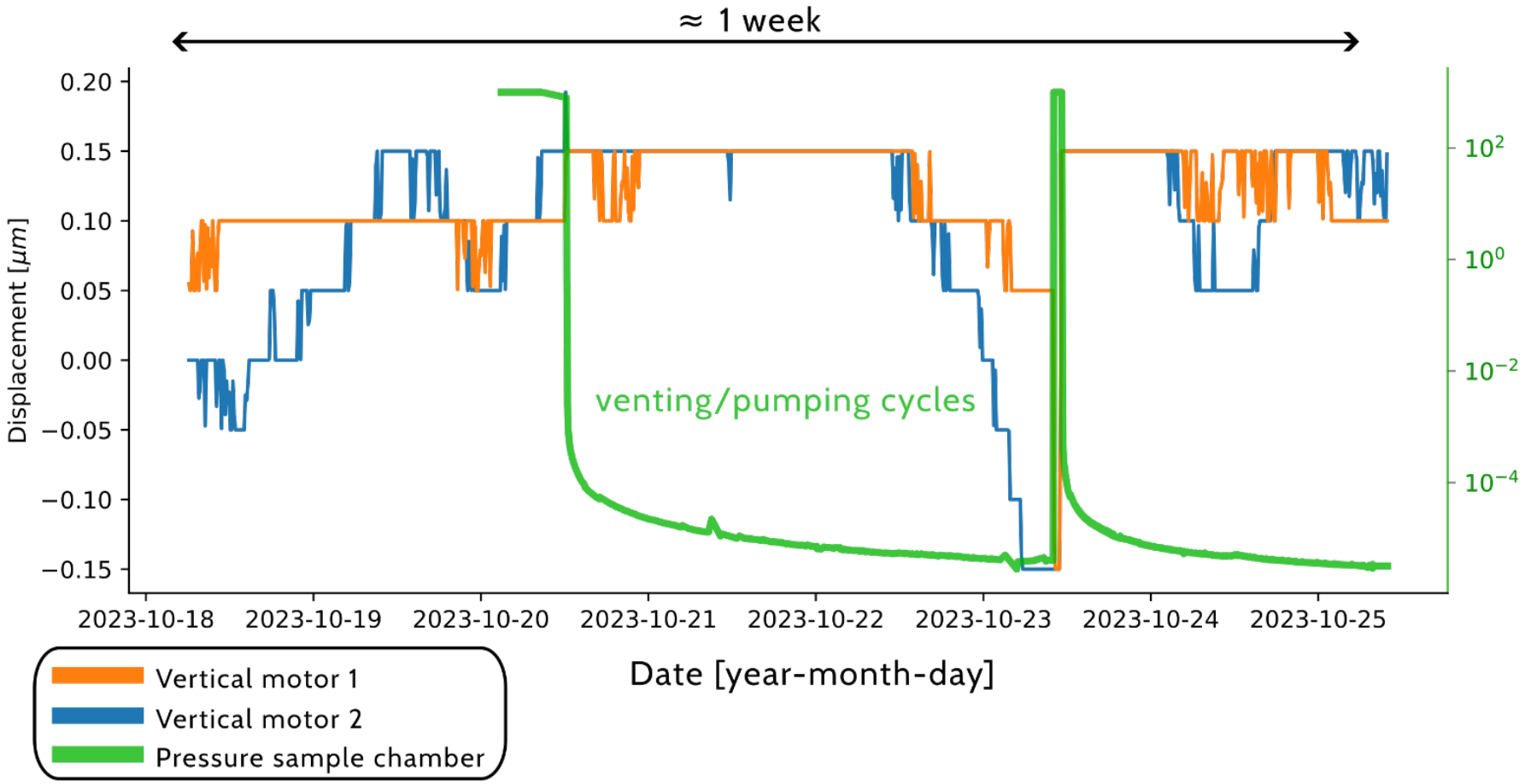

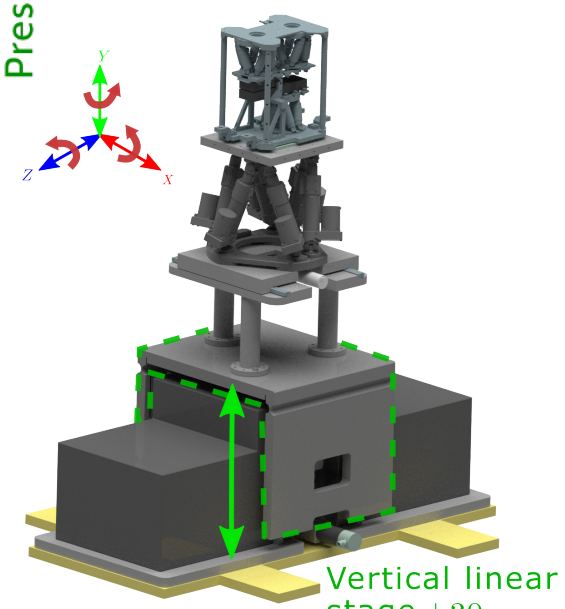

SAMPLE ENVIRONMENT

Results on stability

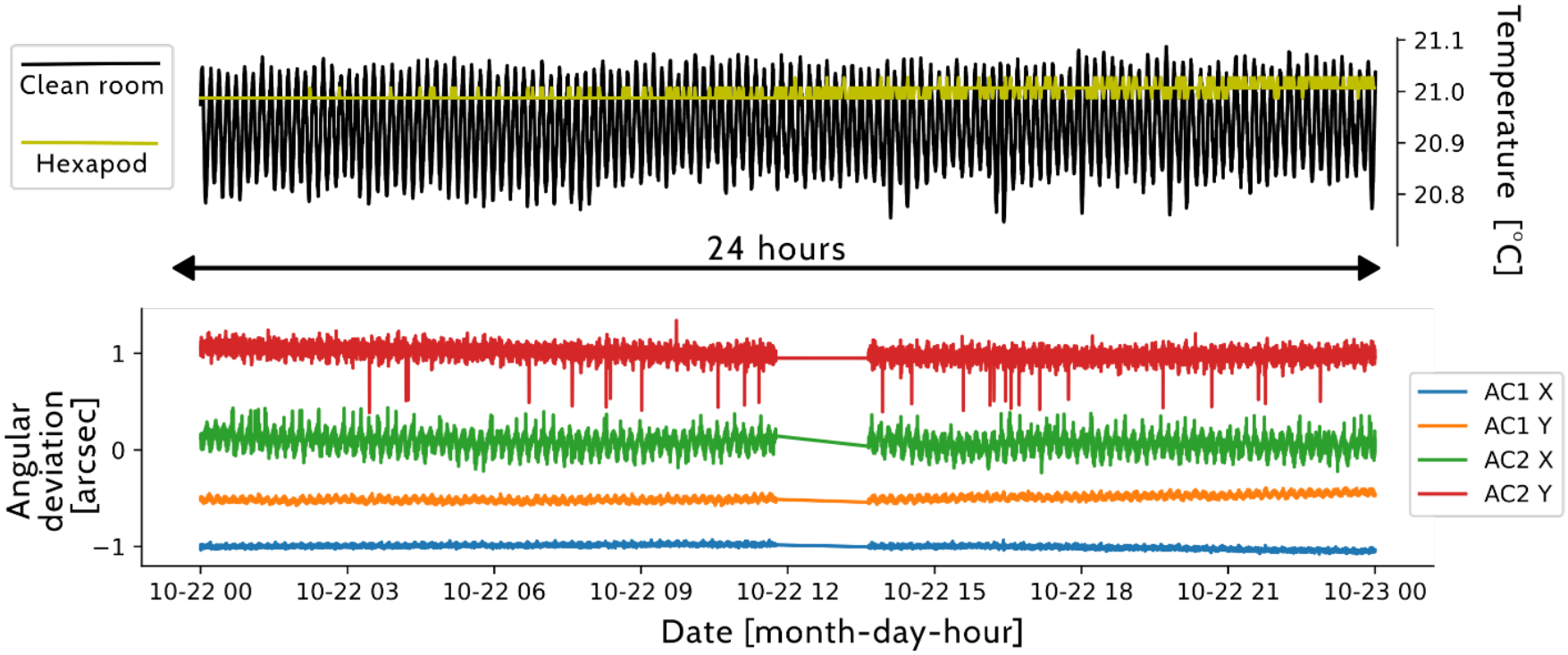

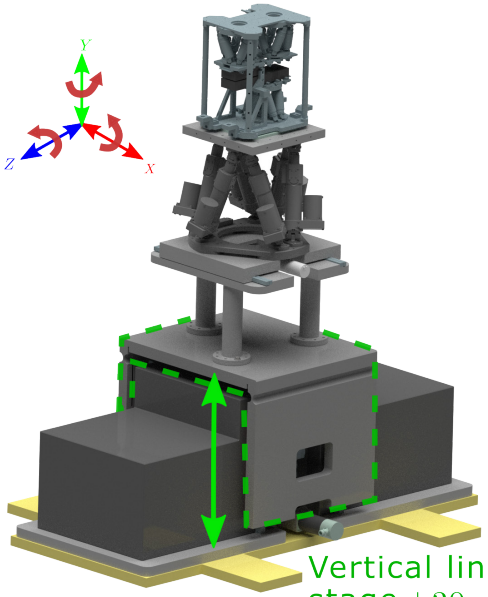

Detector Tower

- Air cooled **sCMOS detector** (36,7 x 36,7 mm^2)
- Focus at **12 m** from sample **(+/- 500 mm**)
- From **0 º to 8 º** angular movement
- Transversal movement of **+/- 100 mm**
- Mechanics based on **stepper motors**, **high precision spindles** and **ball linear guides**
- Two massive granite blocks as support
- Feedback from **absolute encoders**
- Cantilever design to have an **open view** for **Laser Tracker**

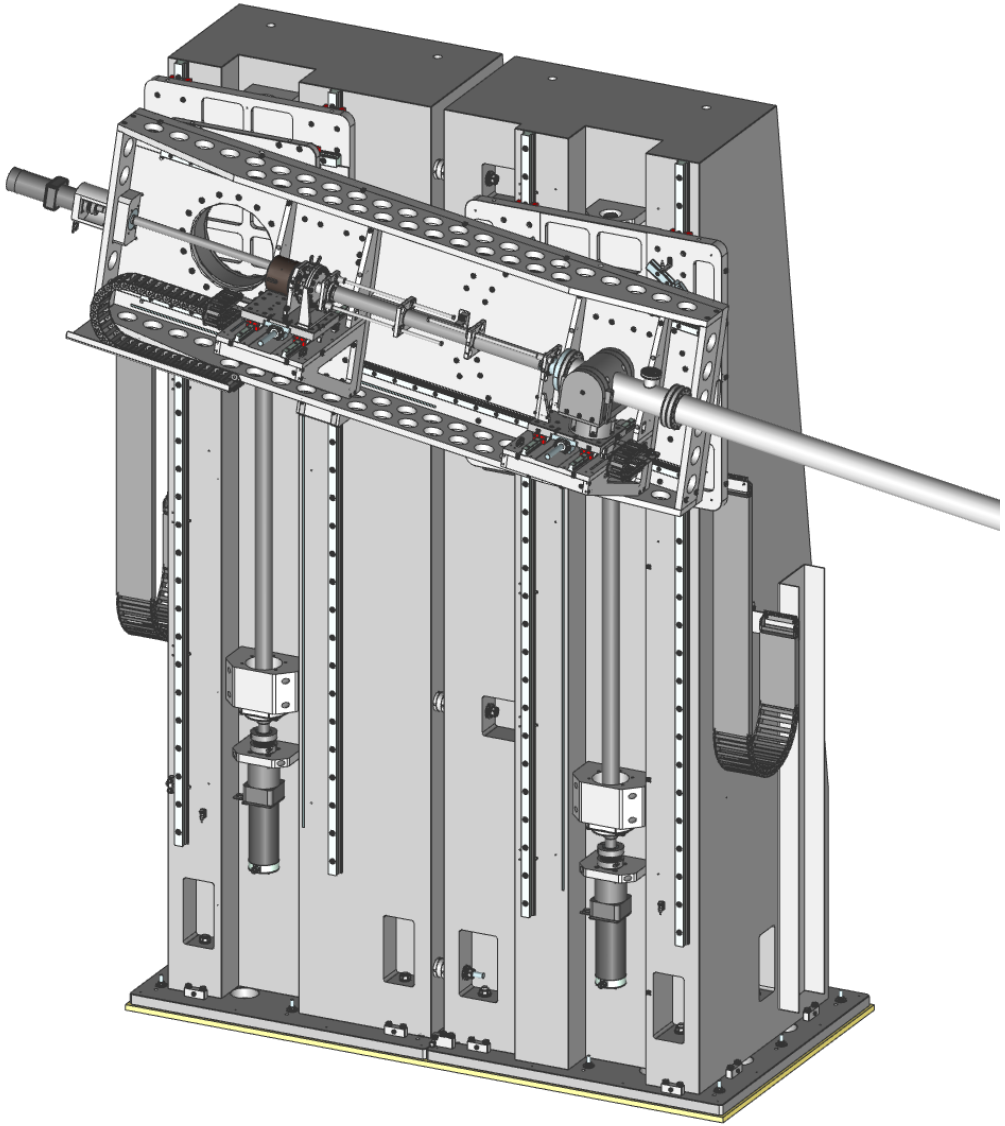

Detector Tower

- Air cooled **sCMOS detector** (36,7 x 36,7 mm^2)
- Focus at **12 m** from sample **(+/- 500 mm**)
- From **0 º to 8 º** angular movement
- Transversal movement of **+/- 100 mm**
- Mechanics based on **stepper motors**, **high precision spindles** and **ball linear guides**
- Two massive granite blocks as support
- Feedback from **absolute encoders**
- Cantilever design to have an **open view** for **Laser Tracker**

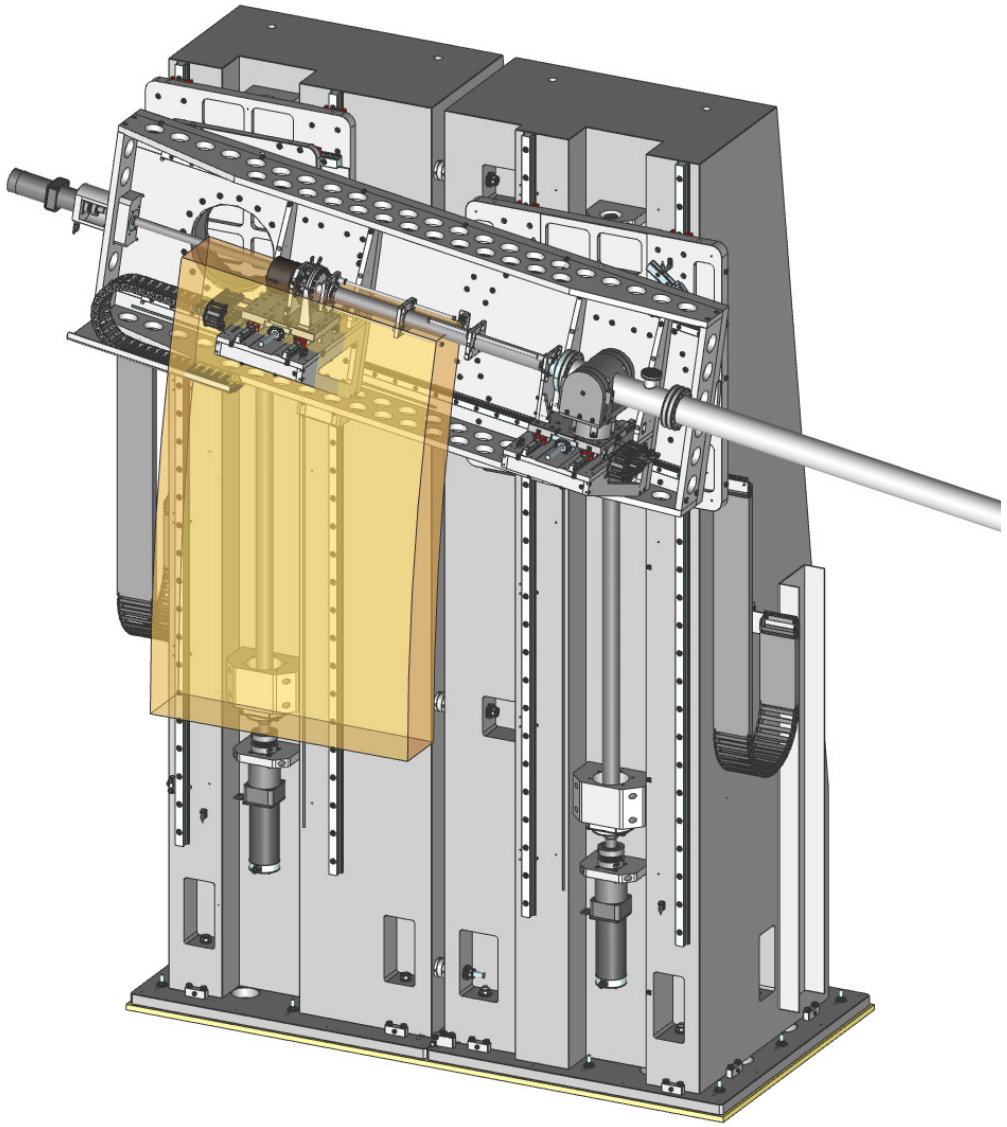

Detector Tower

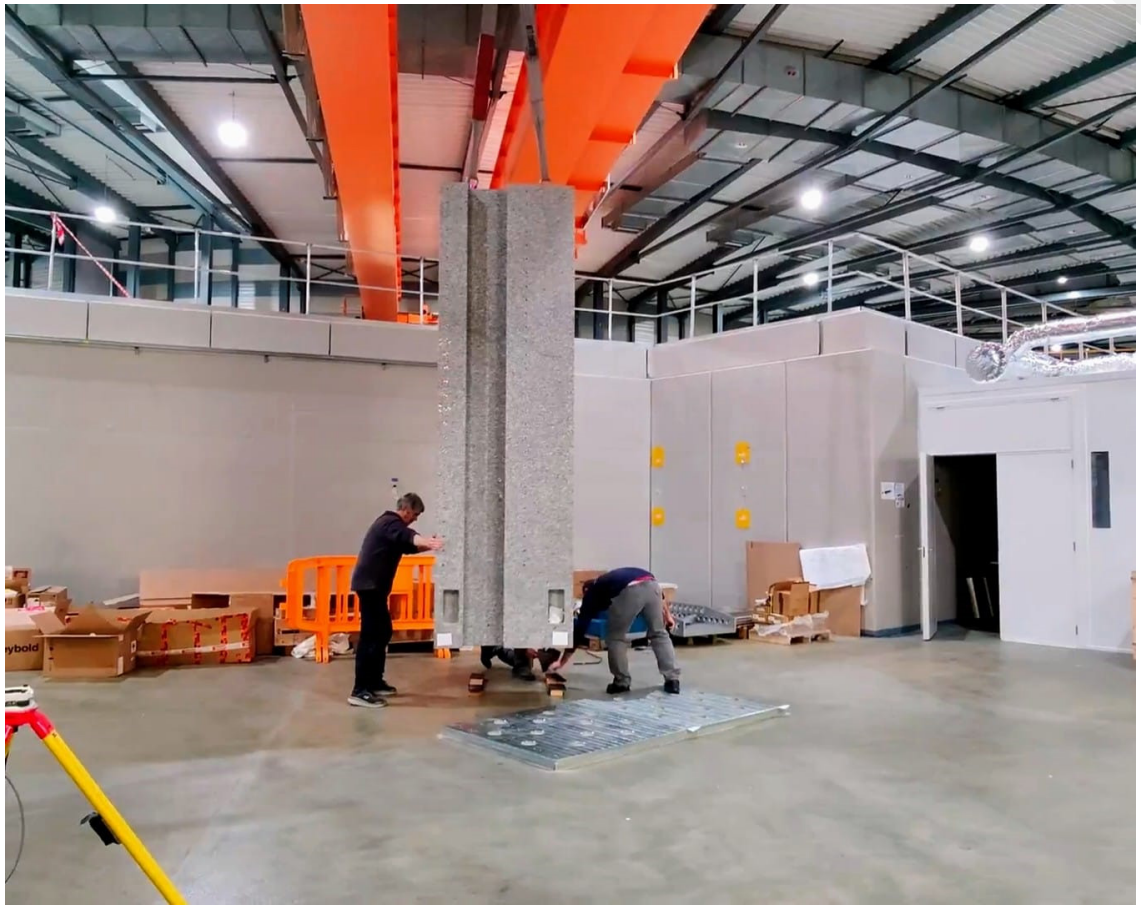

Detector Tower

Detector Tower

Detector Tower

Results on stability

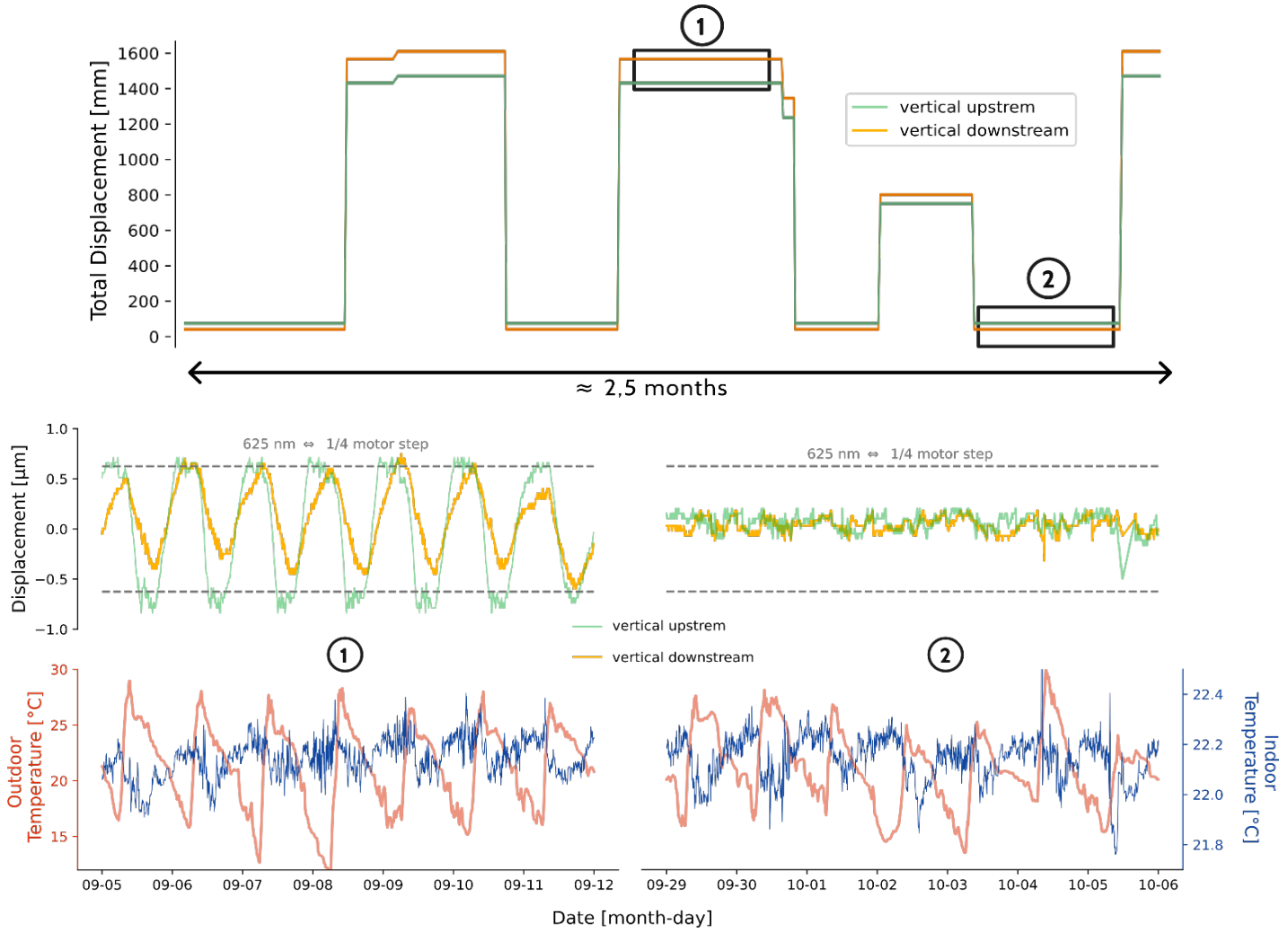

Conclusions

- New **X-ray beamline under commissioning** at ALBA
- **Based on** existing beamline **XPBF2.0** at **PTB**
- **Different approaches** on the design of mechanics, aiming to **improve performances**
- Various tests performed, **favorable results** in terms of **stability** and **repeatability**
- Some unexpected issues to be addressed
- A lot of **commissioning work** remaining
- **Operational readiness** for Mirror Module mass production **by 2027**

ACKNOWLEDGEMENTS

Thanks to...

- Dominique Heinis
- Marc Sanchez
- Alejandro Sánchez Grueso
- Núria Valls Vidal
- Carles Colldelram Peroliu
- Joan Casas Bullich
- Josep Nicolàs Roman
- Guifré Cuní Soler
- Alejandro Crisol Ariño
- Nahikari González
- Alberto Ruz Bedmar
- Borja Revuelta Fernández,
- Albert Ollé Sabaté
- Albert Van Eeckhout Alsinet
- Antonio Camps Jiménez
- Jorge Villanueva Cuenda
- Núria Martí Soler
- Carolina Gutiérrez Neira
- José Armando Ferrer García
- Sergi Pusó Gallart
- Cristina Orozco Roura
- Jordi Marcos Ruzafa
- Raquel Monge García
- María José García Fusté
- Marta Llonch Burgos
- Jon Ladrera Fernández

- Evelyn Handick
- Dieter Skroblin
- Michael Krumrey

- Giuseppe Vacanti
- Enrico Hauser
- Max Collon

- Ivo Ferreira
- Marcos Bavdaz

THANKS!

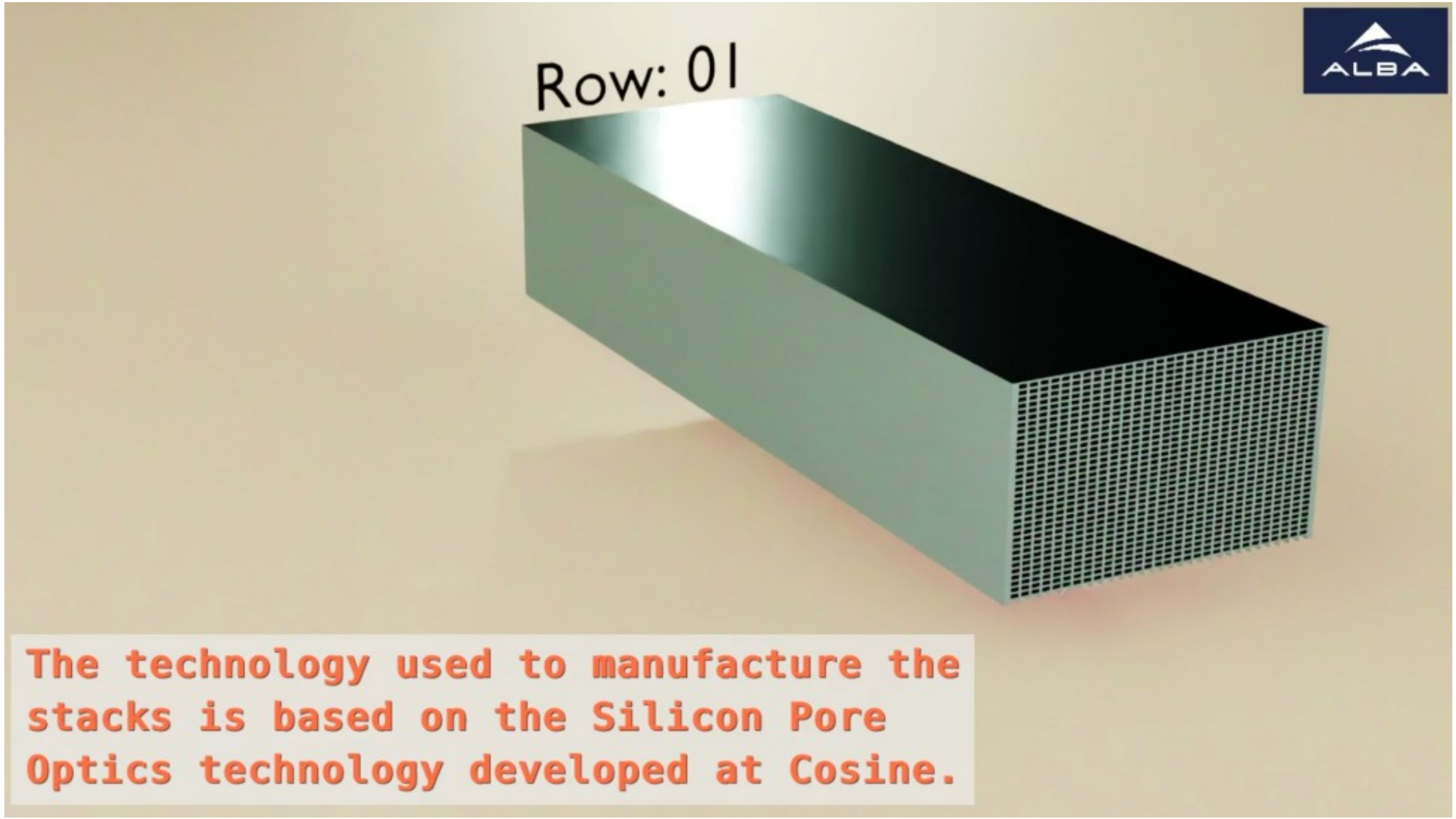
Row: 01
ALBA
The technology used to manufacture the stacks is based on the Silicon Pore Optics technology developed at Cosine.