EUROPEAN SPALLATION SOURCE

Pulsed High Power Klystron Modulators for ESS Linac based on the Stacked Multi-Level (SML) Topology

Carlos A. Martins

ESS – Accelerator Division - RF Electrical Power Systems

www.europeanspallationsource.se

Linac 2016 conference, Sept 2016

ESS Linac and modulator requirements

Pulsed Linac:

Beam pulse length = 2.86ms; Pulse repetition rate = 14Hz

Beam pulse power = 125 MW; Beam average power = 5MW

- **ESS Linac layout**

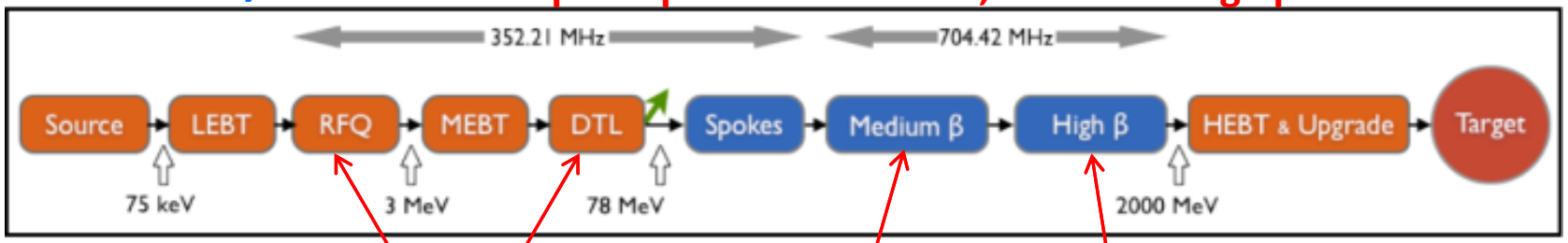

3 modulators 660kVA

9 modulators 660kVA

21 modulators (klystrons or IOT's) 660kVA

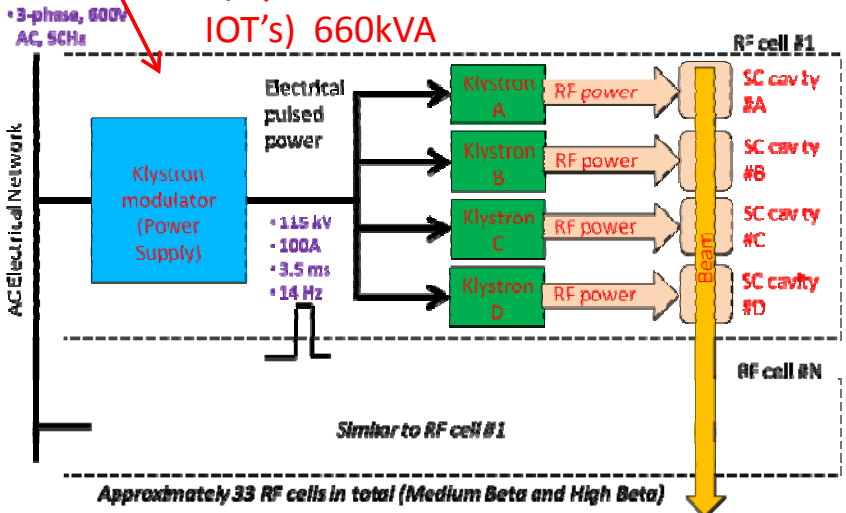

- **In total ~380MWpk of installed pulse power capacity**

Modulators for high power RF sources, inc. ESS:
– *A challenging component to design and procure*

➢ **Sophisticated power electronic systems**

1)- Multidisciplinary design:
- Power Electronics; High Voltage; Mechanical;
- Thermal and cooling;
- Advanced control architectures and software development;

2)- Complex circuits, with different topologies possible;
- Some topologies have opposite principles and construction techniques: (Modularity vs monolithic, redundancy, HV vs LV staging and insulation);

3)- Diversified type of electronic components required;
- HV components, Power semiconductors, Advanced control electronics, Large capacitors, etc.

4)- Impacts directly on operations' safety
- High voltage devices (above hundred kV); High electrical short circuit power (up-to tens MVA);
- Large energy stored (up-to tens of kJ); Heavy loads to handle and transport;

Modulators for high power RF sources, inc. ESS:
– *A challenging component to design and procure*

- **High Voltage pulse quality**

1)- Pulse rise time and Pulse width;

3)- Pulse power amplitude;

4)- Pulse flat-top droop and ripple;

6)- Pulse flat-top stability (pulse-to-pulse and long term drifts);

7)- Maximum energy in case of arc;

8)- Maximum reverse voltage;

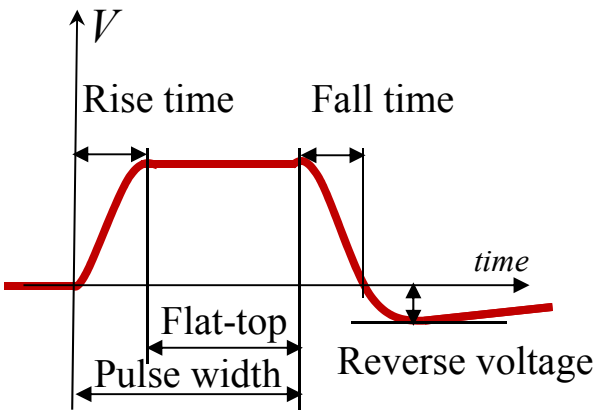

- **High cost impact in the whole accelerator**

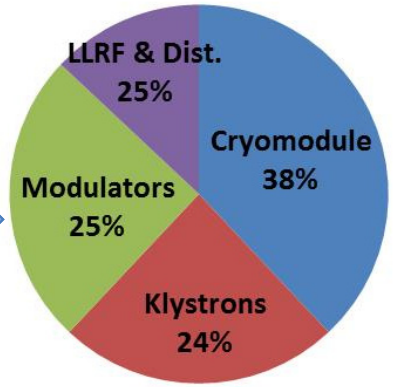

- **Few specialized companies worldwide, most of them SMB's (Small Medium Business)**

1)- Engineering design capabilities;

2)- Construction capacity and testing capabilities;

3)- Quality Assurance and risk mitigation capacity;

- **High impact in accelerator availability**

Modulators for high power RF sources, inc. ESS:
– *A challenging component to design and procure*

EUROPEAN SPALLATION SOURCE

- **Large footprints, impacting strongly on the sizing of the RF gallery**

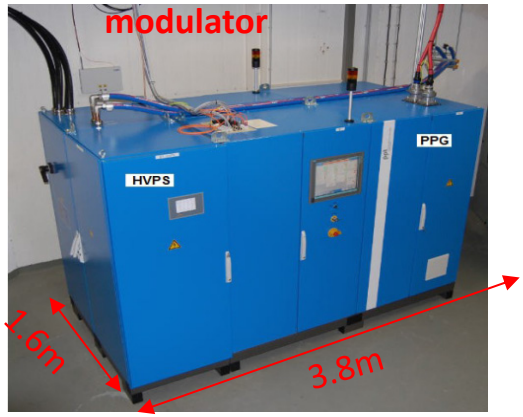

Vertical klystron

- **AC electrical grid power quality**

1)- Current harmonic distortion & Power factor (typical problematics in power electronics);

2)- Flicker (if pulsed with 10mHz<PRR<20Hz) (typical of pulsed loads like in long pulsed Linacs);

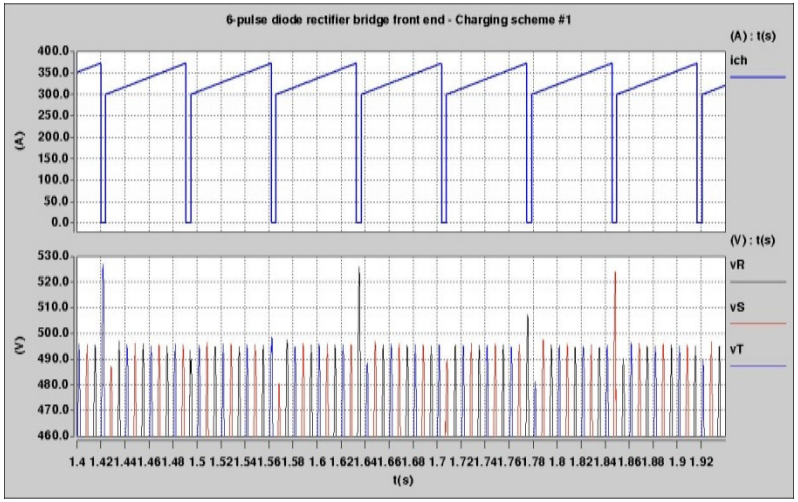

If conventional charging adopted, then ~15MW of pulsed power at 14Hz in the ESS power line

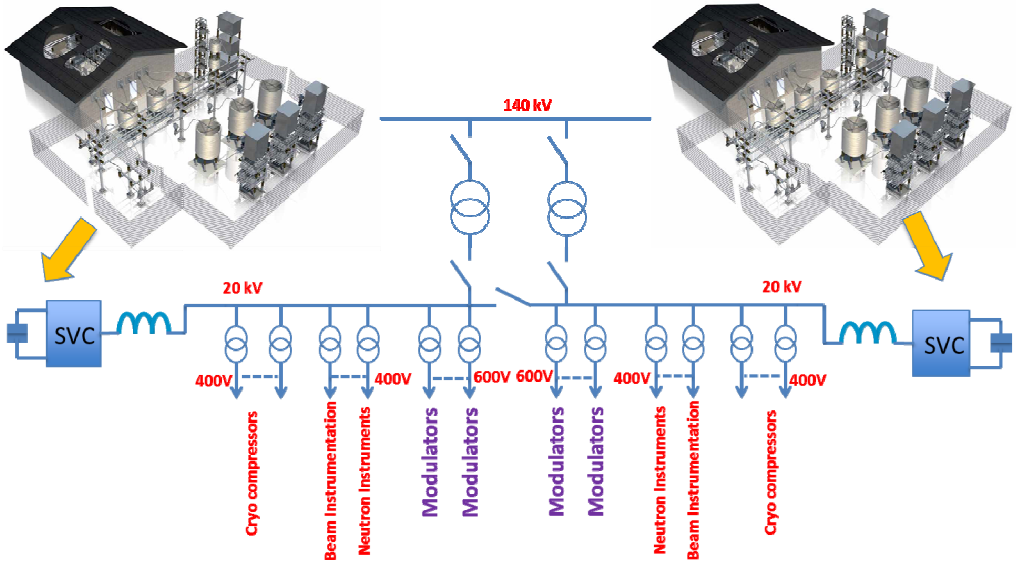

- SVC footprint (outdoors): 2 x (10m x 15m) = 300 m² (PROHIBITIVE !)
- SVC estimated cost : 2 x ~6 M€ = ~12 M€ (PROHIBITIVE !)

Modulators for high power accelerators:
– *A wide spectrum of business opportunities in scientific applications*

EUROPEAN SPALLATION SOURCE

➢ **Business opportunities by scientific project worldwide, over next 10 to 15 years**

Accelerator project name	Country	Quantity	Average power, per unit (kVA)	Total average installed power (MVA)	Pulsed: P (pulse length in ms) or CW	Total estimated cost (M€)
ESS (Mβ+Hβ) – ESS ERIC	Sweden	33	660	21.8	P (3.5ms)	
SPL - CERN	Switzerland	90	660	59.4	P (1.8ms)	
FCC - CERN	Switzerland	600	600	360	CW	
ILC	Japan	450	150	67.5	P (1.5ms)	
X Project - Fermilab	USA	200	70	14	CW	
All projects		**Total installed power = 516 MVA**				**~ 800**

Historic on klystron modulators development for ESS:

➢ **1st ESS modulator procurement (monolithic topology, pulse transformer based):**

Rated 115kV/25A; 2.8ms/20Hz; 160kVA -> enough to power one 1.4MWpk klystron;

Procurement started in July 2011; Delivered in May 2014 (~34 months procurement time);

Limited performance:

- **Rise time = 350µs;**
- **Flat-top droop = 3%;**
- **Efficiency = 88%;**
- **Power density = 22kVA/m² (no space in RF Gallery)**
- **AC power quality issues (flicker, current harmonic distortion)**

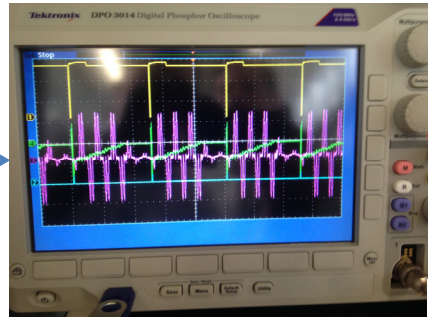

Purple: AC line current

Green: Capacitor bank voltage

High capital cost:

- ~150 modulators needed

8 modulators per RF cell needed

One section of the RF Gallery (8x 704 MHz RF sources)

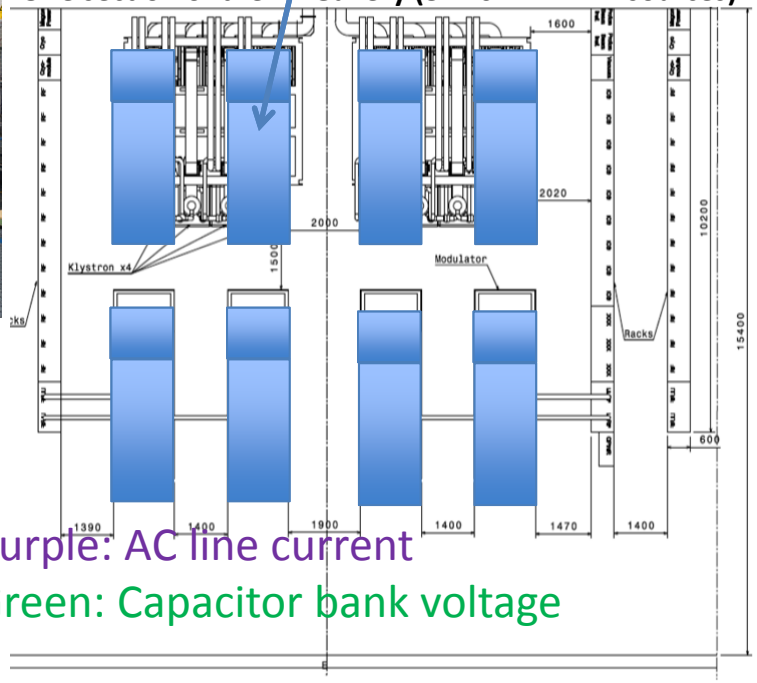

Historic on klystron modulators development for ESS:

- **2nd ESS modulator procurement (modular topology, HF transformers based):**

Rated 115kV/50A; 3.5ms/14Hz; 330kVA -> enough to power two 1.4MWpk klystron in //;

Procurement started in July 2014; Delivered in Dec. 2016 ? (~30 months procurement time);

Expect. performance:

- **Rise time = ~100µs;**
- **Flat-top droop < 1%;**
- **Efficiency = 89%;**
- **Power density = 66kVA/m^2**
- **Good AC power quality: Active Front End;**
- **Reliability concern due to huge number of components and limited design margins in HV**

Still high capital cost:

- ~75 modulators needed

Pulsed modulators for non gridded tubes (i.e. klystrons):
- main topologies (modulators having been fully assembled and tested)

EUROPEAN SPALLATION SOURCE

"Pulse" transformer based

- **Pulse transformer based** (ver. 1-monolithic PT)

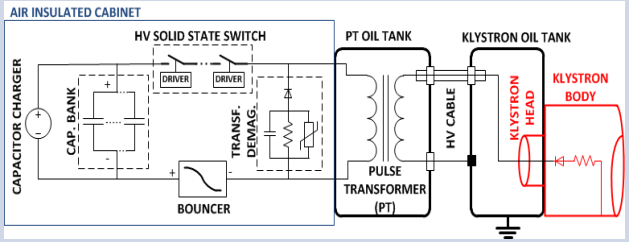

- **Pulse transformer based** (ver. 2-multi prim. winding)

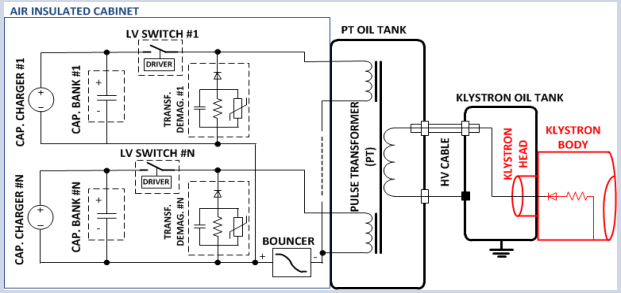

- **Pulse transformer based** (ver. 3- stacked converters)

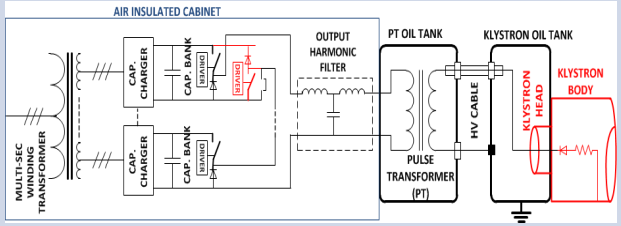

"HF" transformer based

- **Stacked Multi-Level** (ESS design)

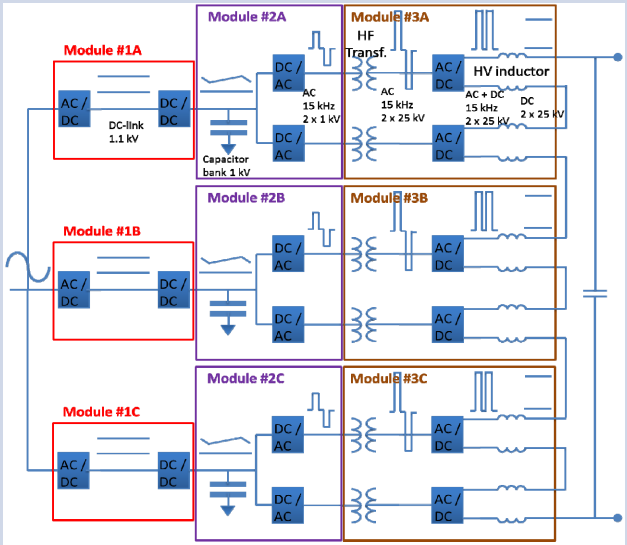

- **Resonant polyphase**

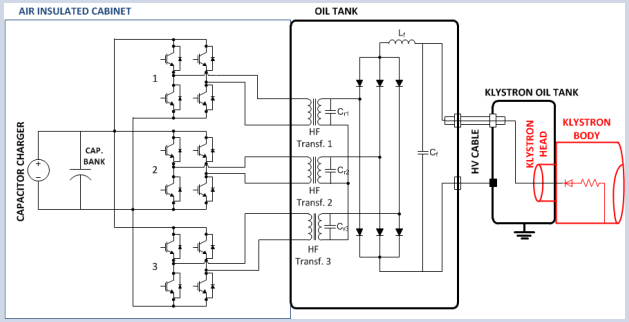

Transformerless

- **Marx generator**

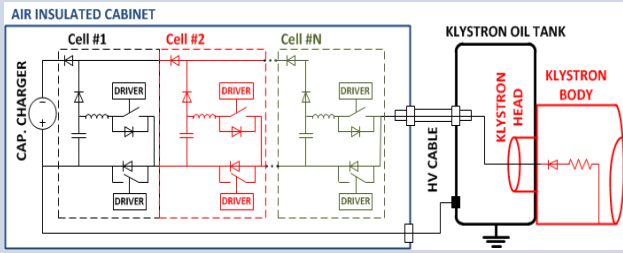

- **Direct switch**

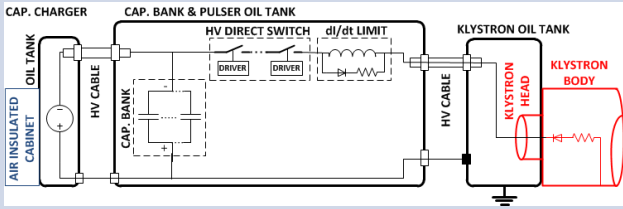

Pulsed modulators for klystrons:
- the two most common topologies (on my view)

EUROPEAN SPALLATION SOURCE

Topology 1: Pulse Transformer based

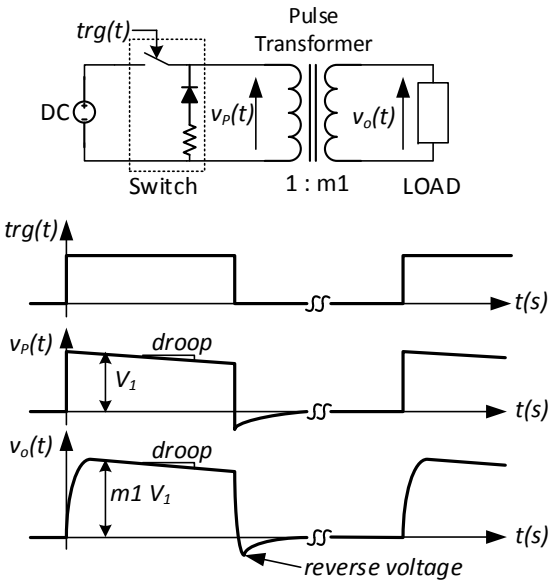

HV pulse transformer

MV switch

Topology 2: HF transformer based

HV HF transformer + AC/DC + filter

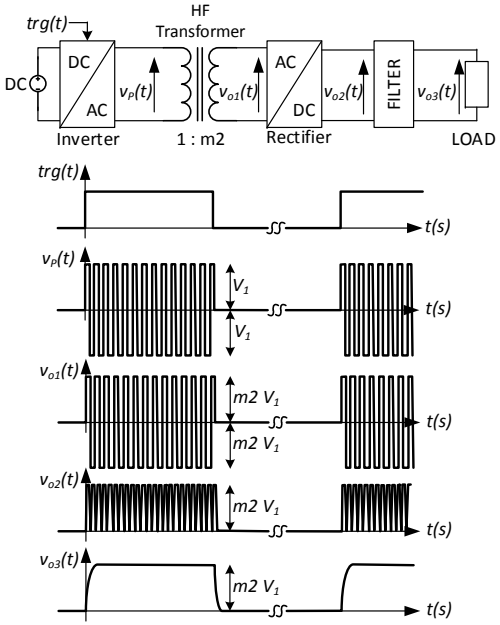

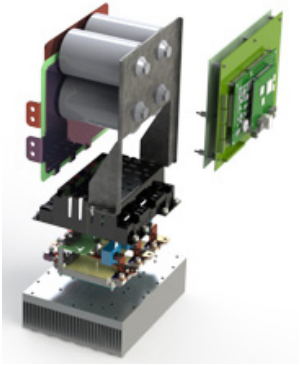

LV DC/AC Inverter

Pulsed modulators for klystrons:
- Topology based on HF transformers.
The ESS Stacked Multi-Level (SML) modulator

Ratings: 115kV / 100A; pulsed at 3.5ms/14Hz

Max. pulse rise time (0..99%)	120µs
Max. pulse overshoot	2% of U_N
Max. pulse reverse (backswing) voltage	10% of U_N
Max. voltage droop on pulse flat-top	1% of U_N
Max. voltage ripple on pulse flat-top	0.15% of U_N
AC grid line voltage	600V
Max. flicker on AC grid	0.3% of U_N
Max. current THD on AC grid	3%
Min. efficiency, AC grid to HV output	91%

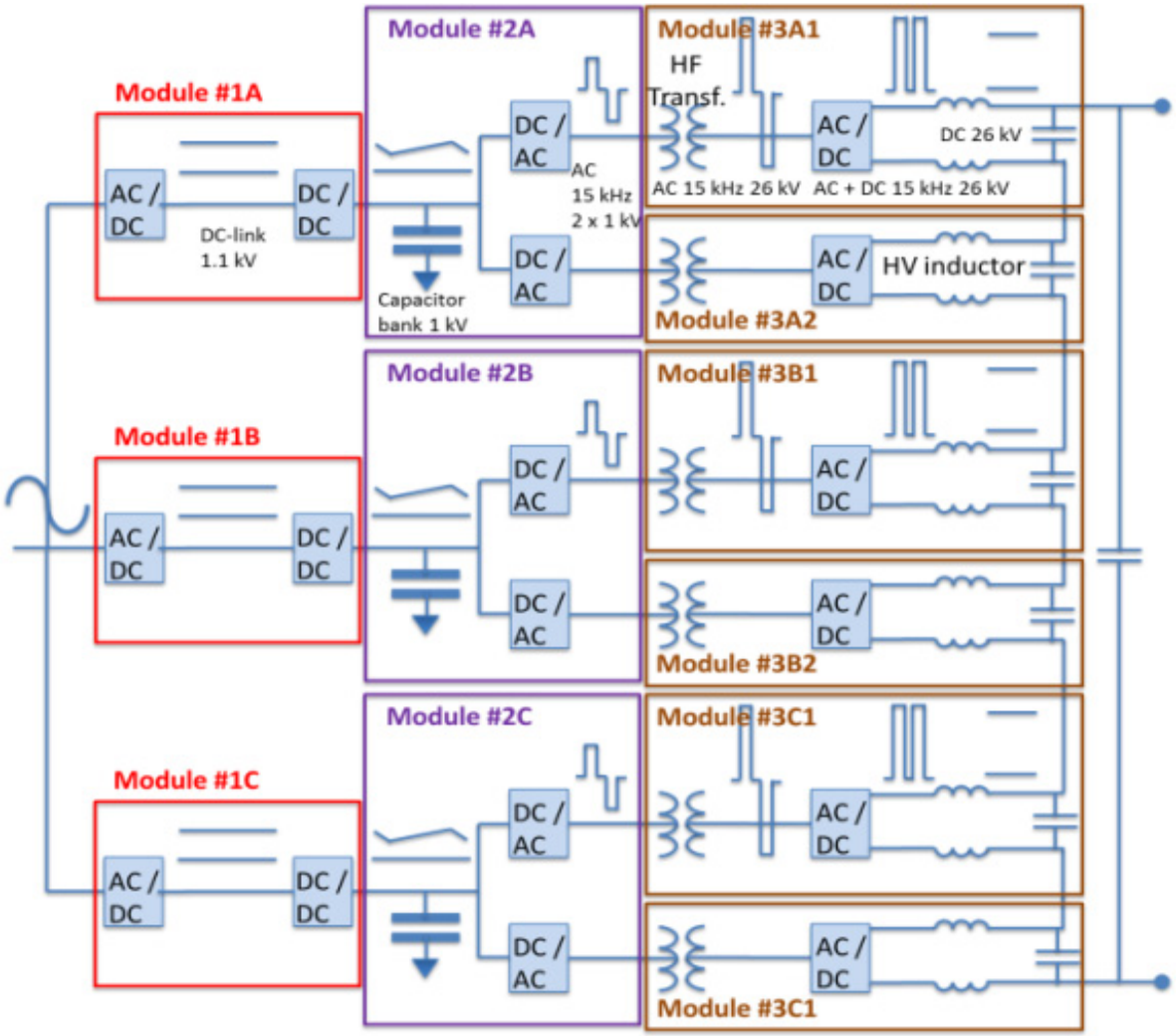

SML modulator :

- *Design and prototyping*

(prototype rated: 115kV/20A; 3.5ms/14Hz)

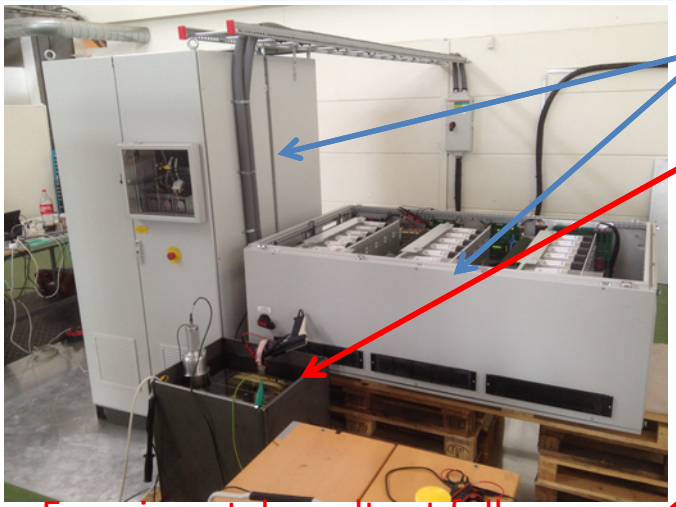

Part I – Low voltage power converter

Part II – HV modules in oil tank

Experimental results at full power:
Pulsed at 20kV/20A, 3.5ms/14Hz

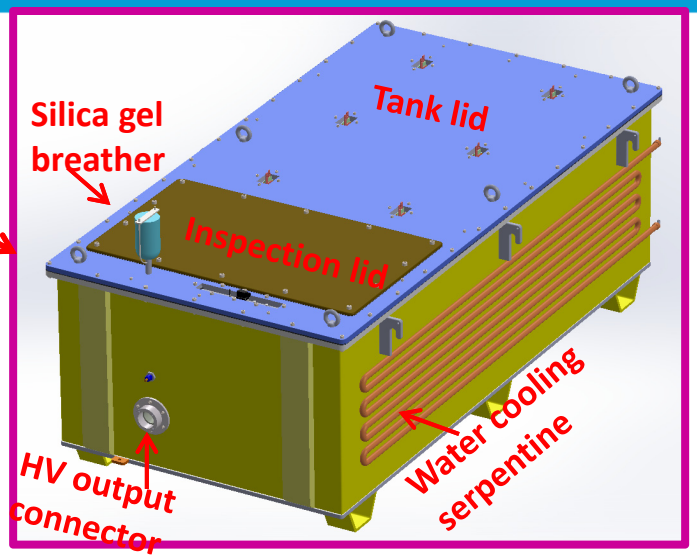

HV module prototype in assembly workshop at LTH

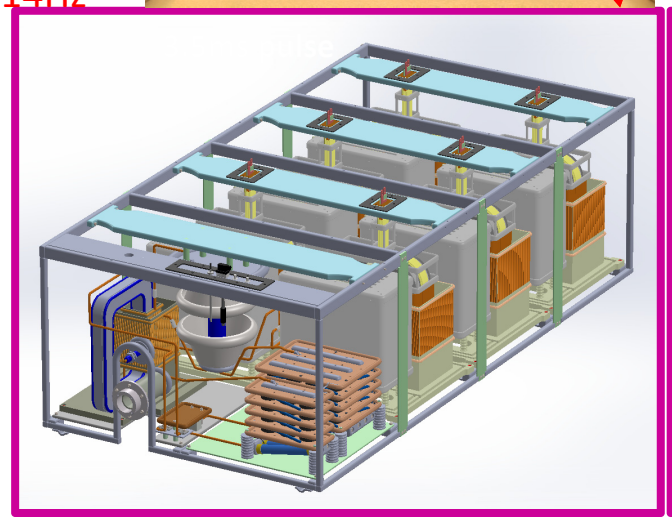

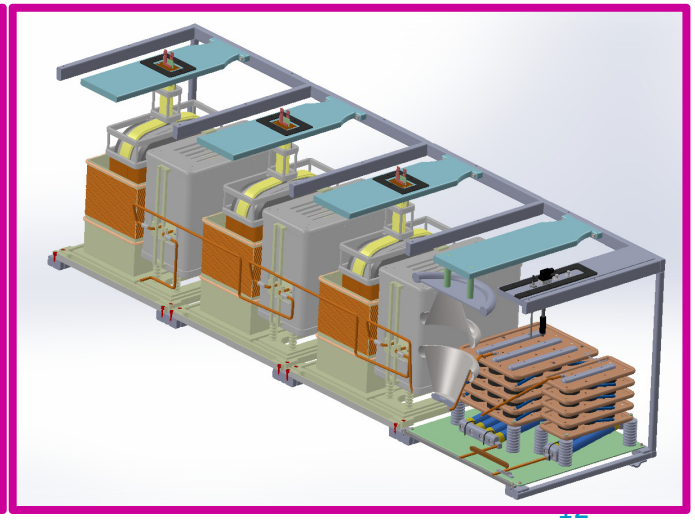

SML modulator :

- *Testing of the reduced scale prototype*

(prototype rated: 115kV/20A; 3.5ms/14Hz)

LUND UNIVERSITY

EUROPEAN SPALLATION SOURCE

1. HV oil tank assembly received at test stand - 4th March 2016

2. Preliminary testing of HV oil tank assembly at low voltage - 24th March 2016;

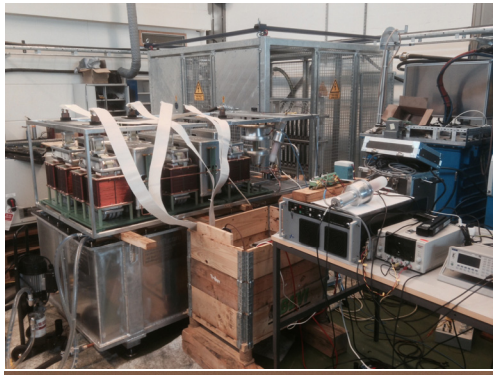

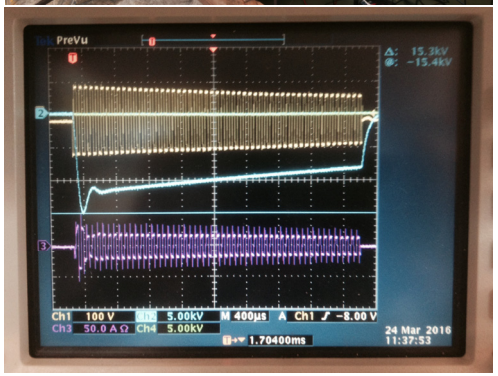

3 & 4 Testing of complete system

3. 1st testing at High Voltage - 4th April 2016

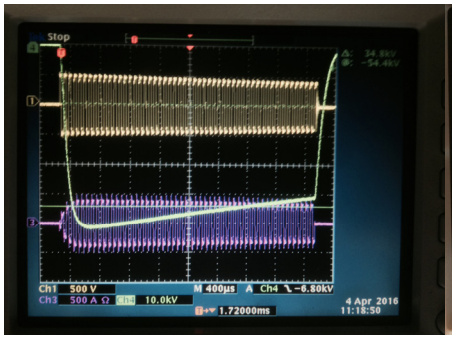

4. 90kV with droop comp. - 18th April 2016

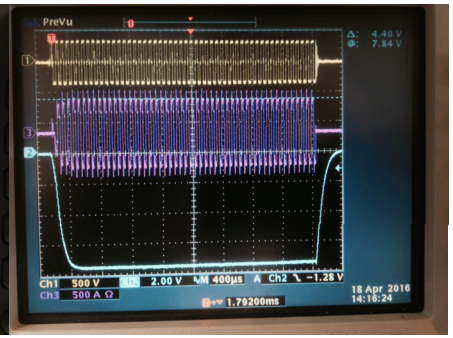

SML modulator :

- *Testing of a reduced scale prototype*
  (prototype rated: 115kV/20A; 3.5ms/14Hz)

Integrated test of complete system (Part I + Part II)

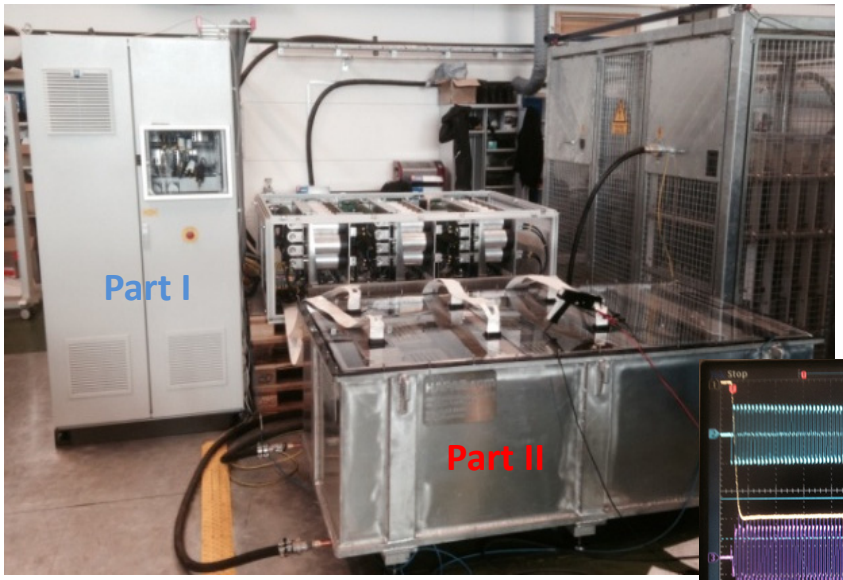

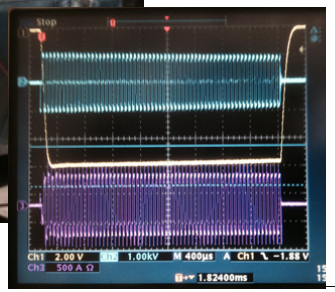

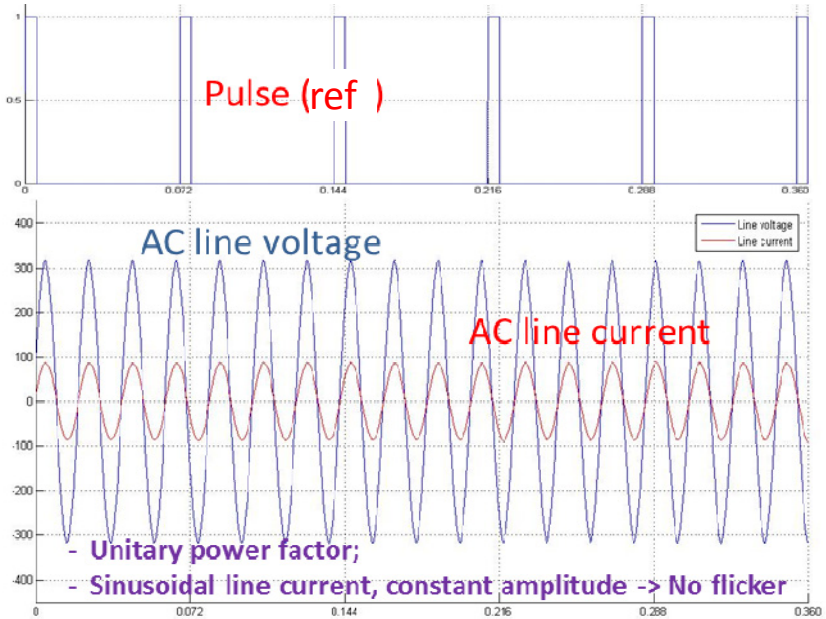

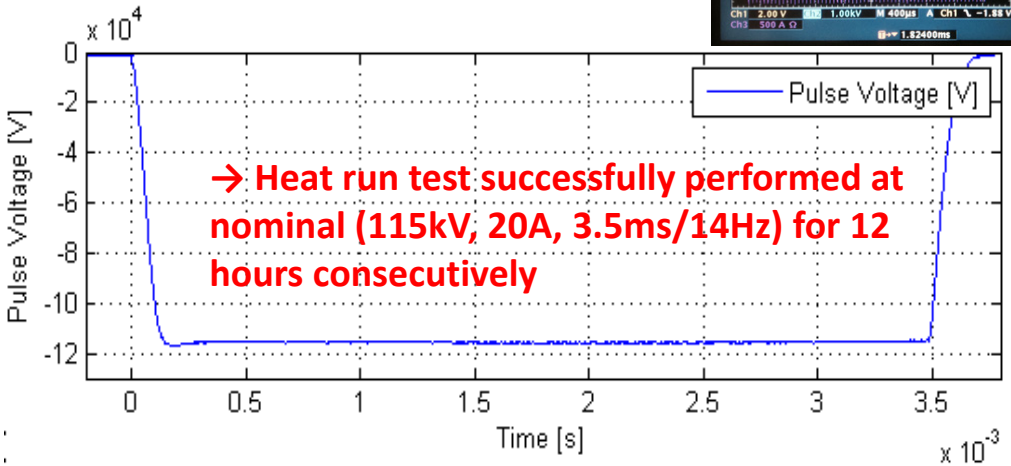

→ Heat run test successfully performed at nominal (115kV, 20A, 3.5ms/14Hz) for 12 hours consecutively

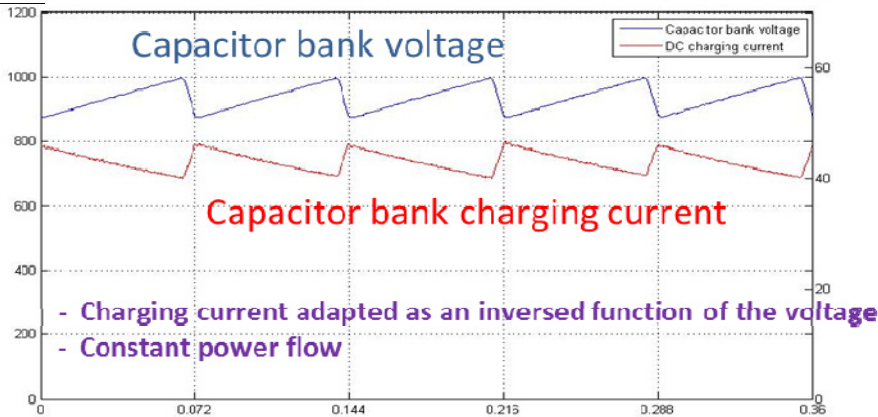

SML modulator, Full Scale design (660kVA)

- Supply of 4x 1.4MW$_{pk}$ klystrons in parallel

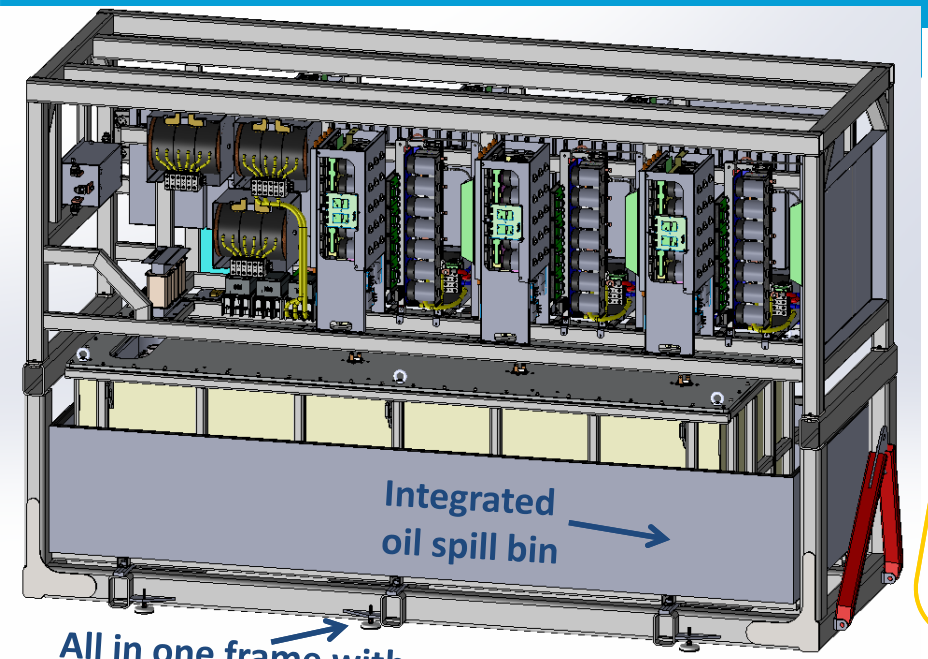

All in one frame with permanently mounted wheels for easy transportation

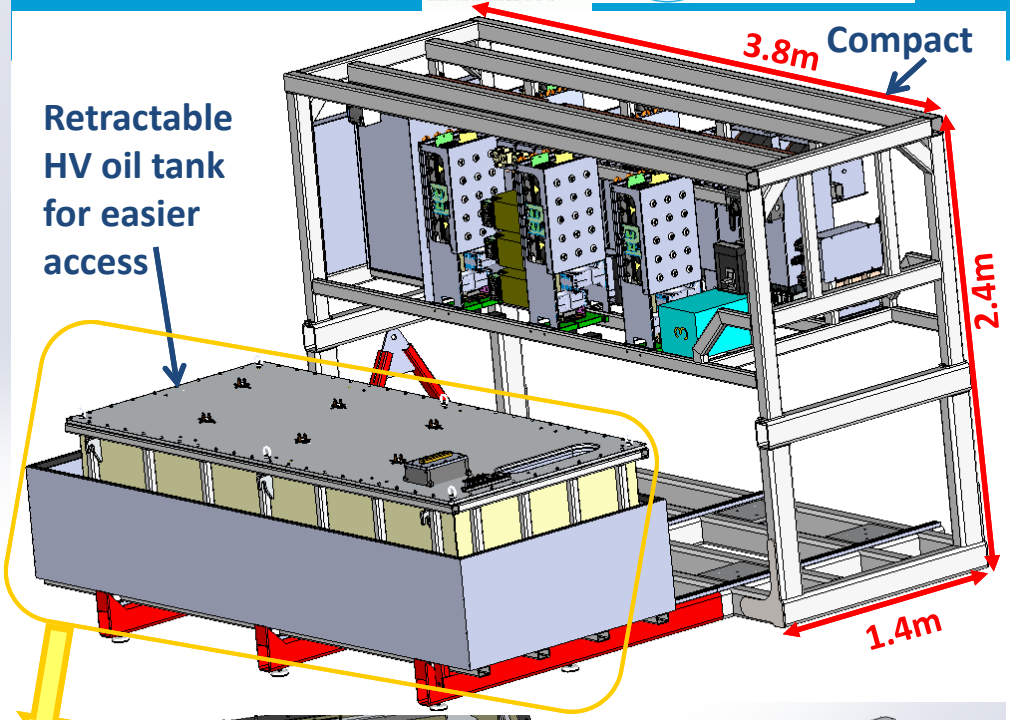

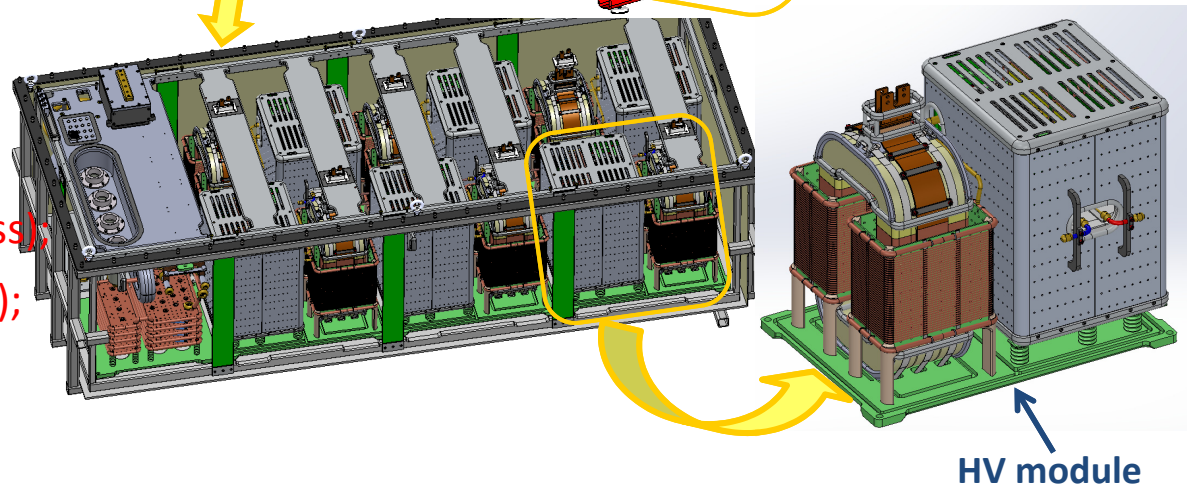

- **Total footprint:** 3.8m x 1.4m (planned was 5.5m x 1.6m, i.e. 40% less);
- **Total weight:** < 5.5 tons (without oil);
- **Total volume of oil:** ~ 2000 litters;

SML modulator, Full Scale design (660kVA)

- Arc simulation in a klystron

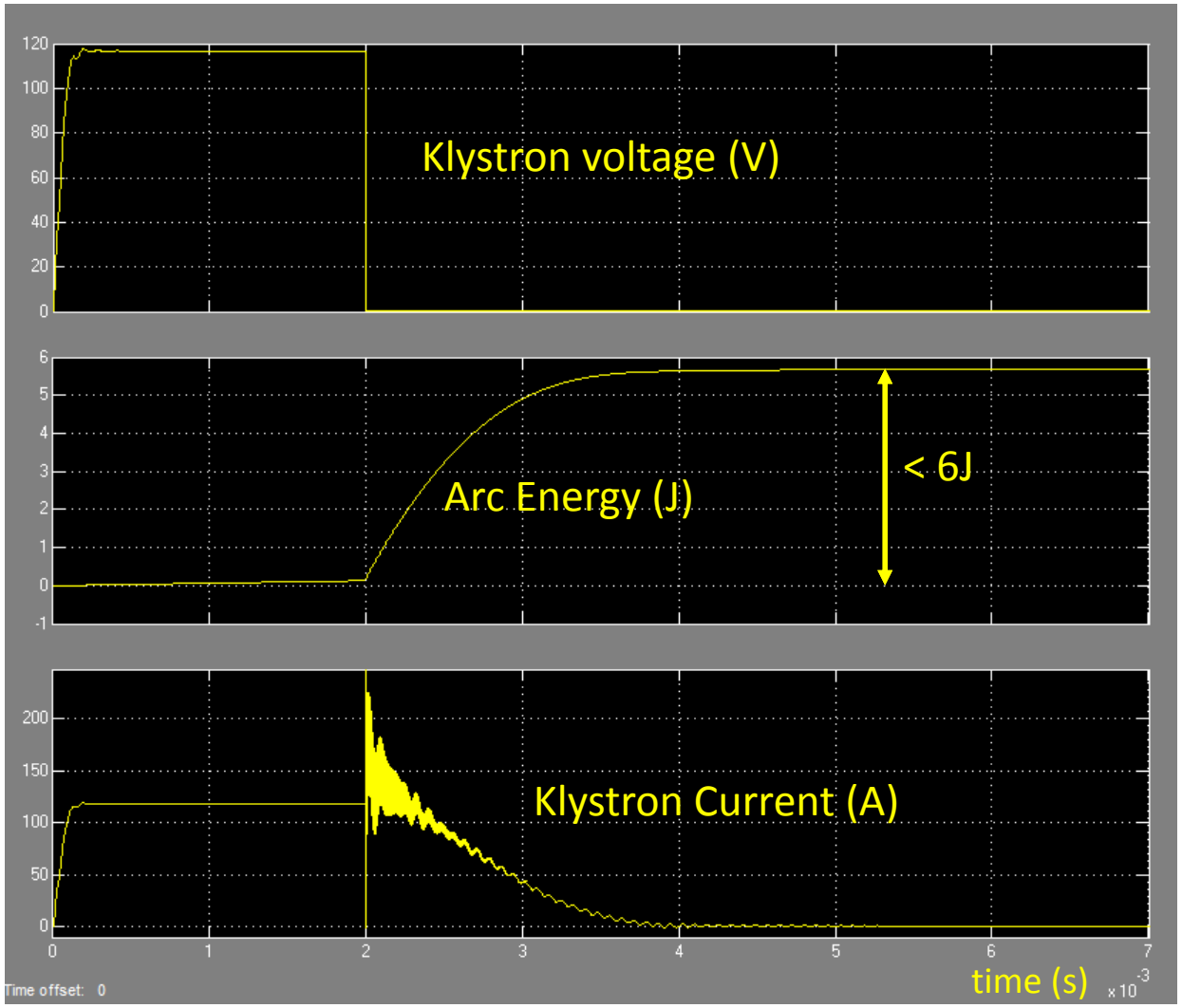

The Stacked Multi-Level (SML) modulator:
- Keypoints

- Modular concept, allowing the increase of rated power by adapting the number of modules. Facilitates maintenance;
- Up to 660 kVA average power possible, allowing the supply of 4 x 1.4MW klystrons / IOT's in parallel;
- Power density in the order of 124 kVA/m^2 (~5.6x higher than ESS 1st mod.; ~1.9x higher than ESS 2nd mod.)
- Compatible both with PULSED and CW operations and with different types of RF amplifiers (Klystrons, IOT's, tetrodes, etc.);
- Lower cost due to limited component count and usage of standard LV components into a great extent. Less modulators needed for the project (33 in case of ESS);
- No active power electronic devices inside oil tanks (facilitates maintenance);
- Improved efficiency (~92%), due to minimal number of conversion stages;
- Good pulse quality (~120µs rise time 0..99%, <0.17% flat-top ripple, <1% voltage droop);
- Good AC grid power quality. AC/DC + DC/DC allow constant power absorption:

  - flicker-free operation (<0.3%), sinusoidal current absorption (THD < 5%), unitary power factor (>0.98);