Tuning of the CERN 750 MHz RFQ for Medical Applications

LINAC 2016
East Lansing, Michigan, USA

B. Koubek, A. Grudiev, Y. Cuvet, C. Rossi, M. Timmins
CERN, Geneva, Switzerland

Poster THPLR055

750 MHz RFQ

Frequency	750 MHz
Input Energy	40 keV
Output Energy	5 MeV
Length	2 m
Diameter	0.134 m
# Modules	4
# Tuners	32
Power Supply IOT	4 x 100 kW
# Power Couplers	4
# Pickup Antennas	16

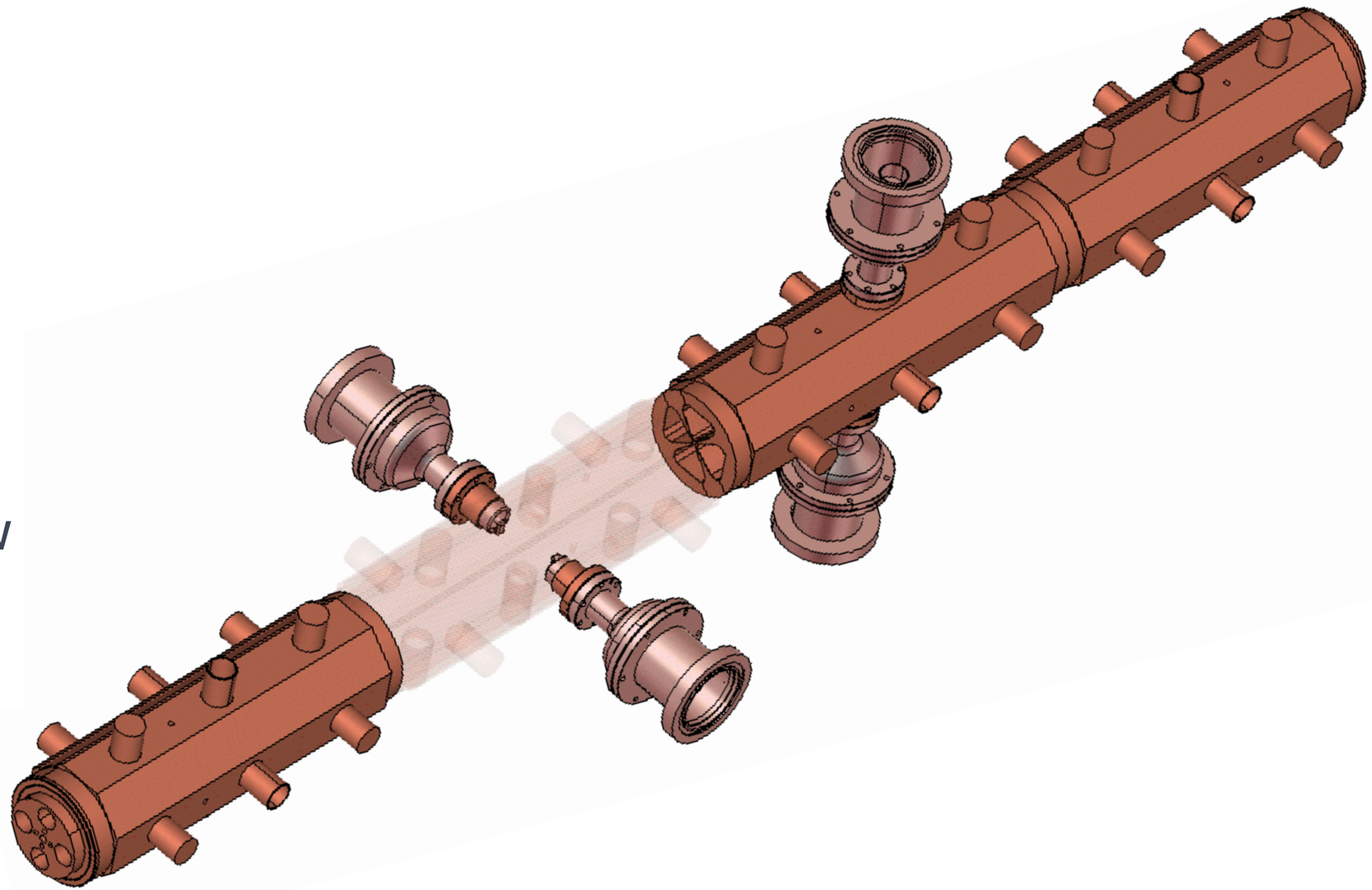

Poster THPLR055

Bead Pull Measurements

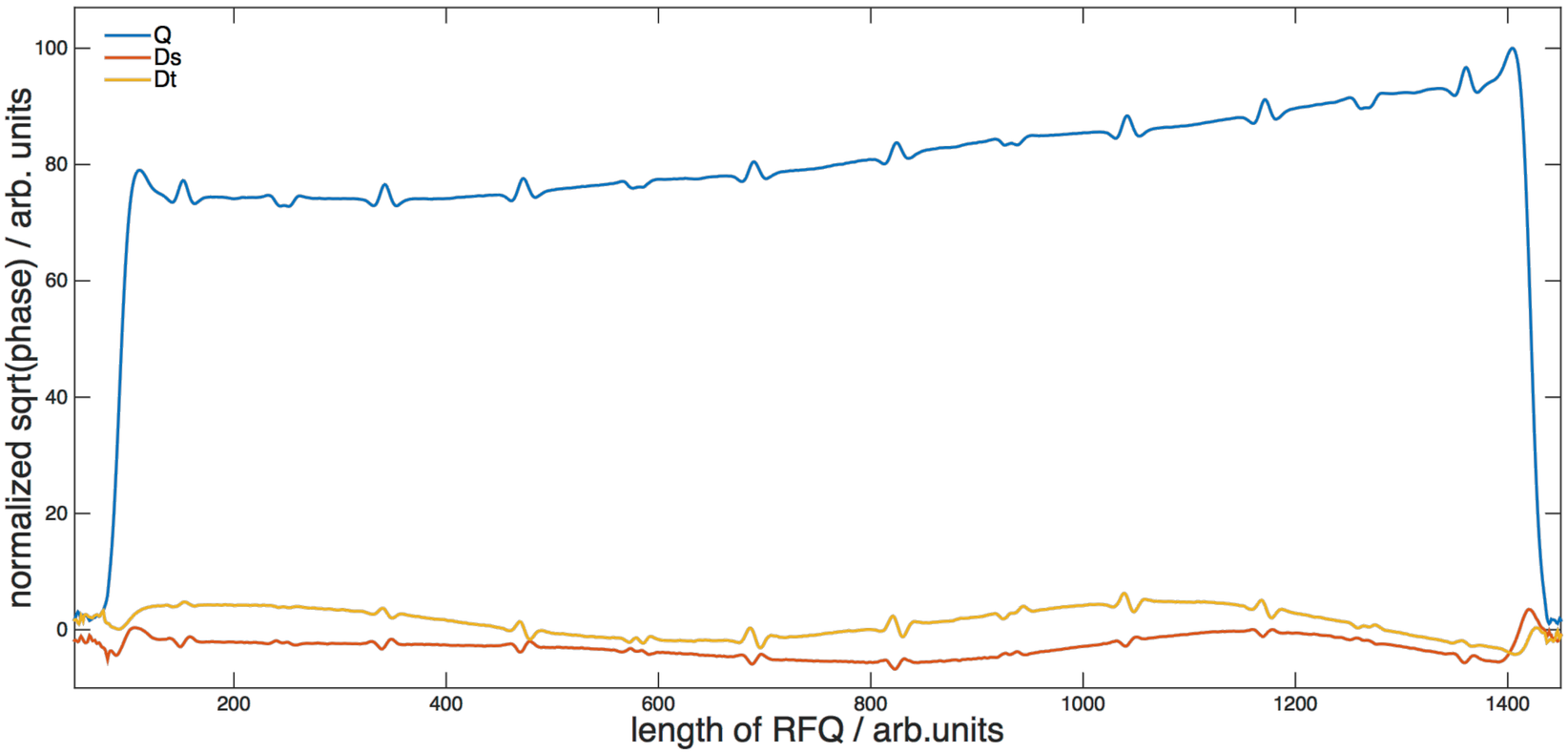

$$
\begin{aligned}
Q &= (B_1 - B_2 + B_3 - B_4)/4 = const. \\
Ds &= (B_1 - B_3)/2 = 0 \\
Dt &= (B_2 - B_4)/2 = 0
\end{aligned}
$$

Poster THPLR055

Tuning Algorithm

$$M = \begin{bmatrix} \frac{\partial Q_1}{\partial T_1} & \frac{\partial Q_1}{\partial T_2} & \cdots & \cdots & \cdots & \frac{\partial Q_1}{\partial T_{32}} \\ \vdots & \ddots & \ddots & \ddots & \ddots & \vdots \\ \frac{\partial Q_i}{\partial T_1} & \frac{\partial Q_i}{\partial T_2} & \cdots & \cdots & \cdots & \frac{\partial Q_i}{\partial T_{32}} \\ \frac{\partial Ds_1}{\partial T_1} & \frac{\partial Ds_1}{\partial T_2} & \cdots & \cdots & \cdots & \frac{\partial Ds_1}{\partial T_{32}} \\ \vdots & \ddots & \ddots & \ddots & \ddots & \vdots \\ \frac{\partial Dt_1}{\partial T_1} & \frac{\partial Dt_1}{\partial T_2} & \cdots & \cdots & \cdots & \frac{\partial Dt_1}{\partial T_{32}} \\ \vdots & \ddots & \ddots & \ddots & \ddots & \vdots \end{bmatrix}$$

$$V = \mathbf{M} \cdot T \qquad \mathbf{M} = [U \cdot S \cdot V^T]$$

$$T = \mathbf{M^{-1}} \cdot V \qquad \mathbf{M^{-1}} = [V \cdot S^{-1} \cdot U^T]$$

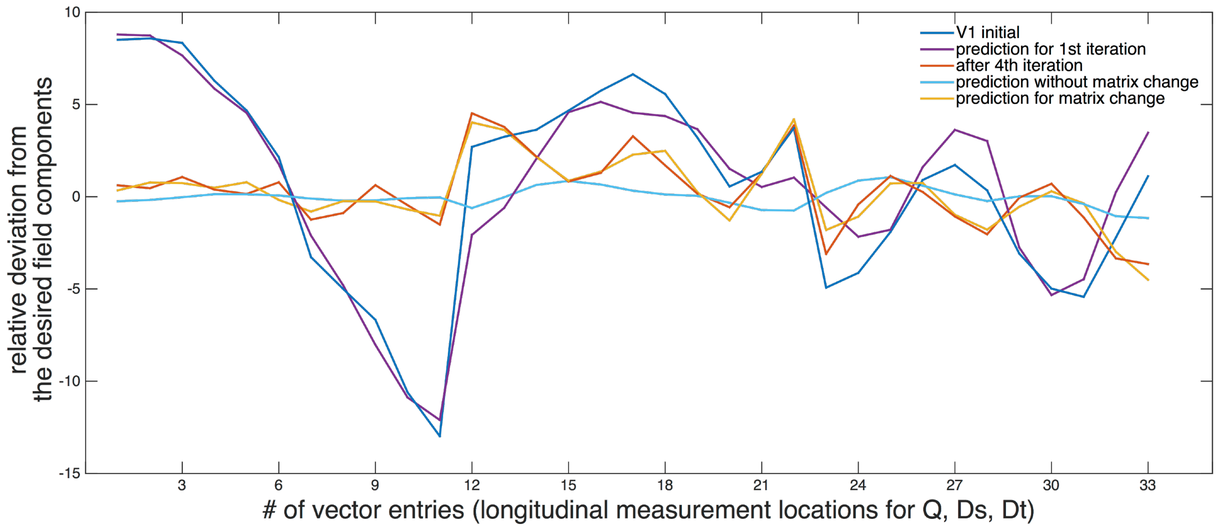

Advantages using SVD

- inversion of non-square and ill-conditioned matrices
- several solutions for tuner settings
- predictions for field compensation
- matrix can be changed during iterations to calculate tuner settings
- no need to measure matrix again

Poster THPLR055

Tuning

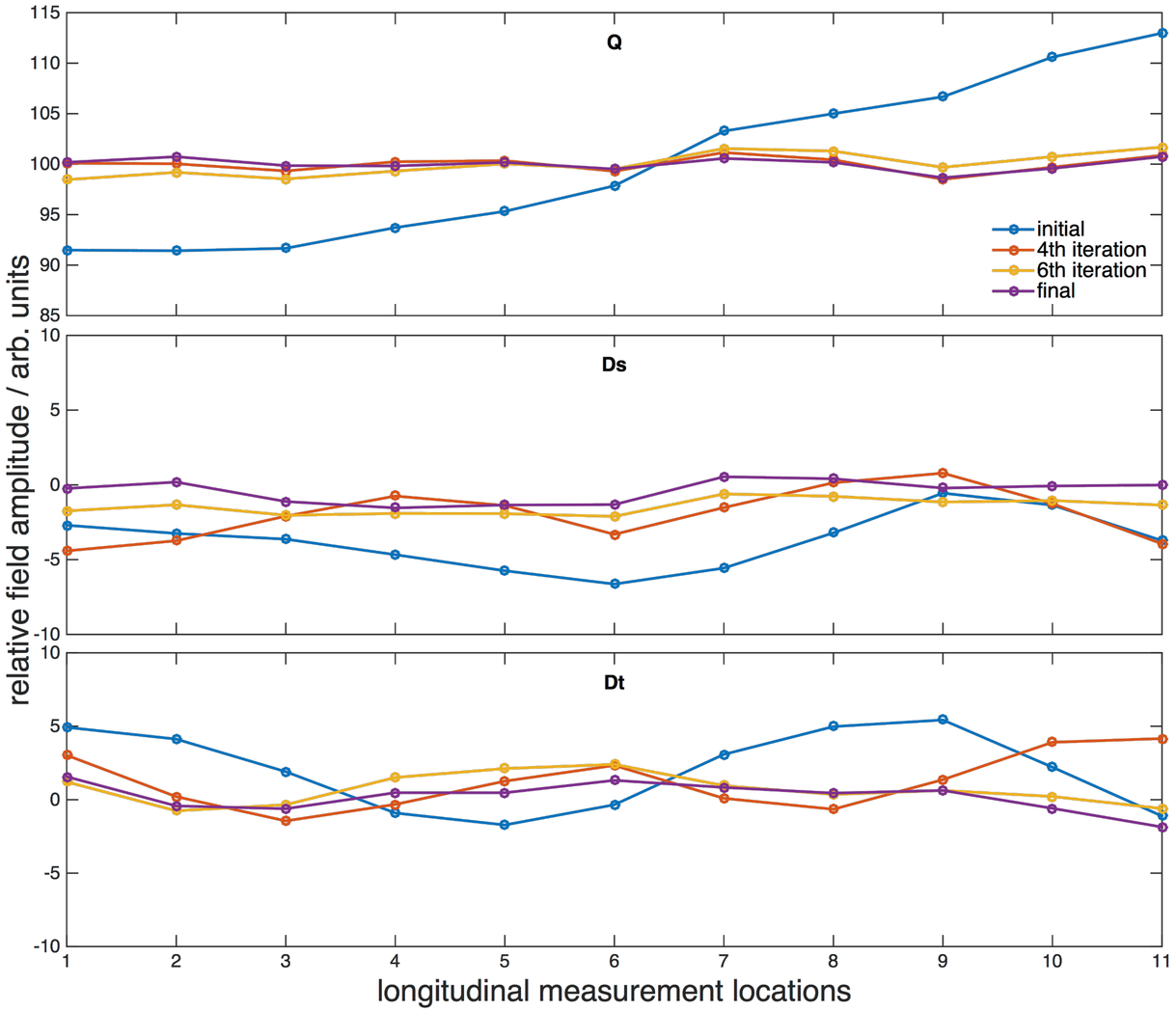

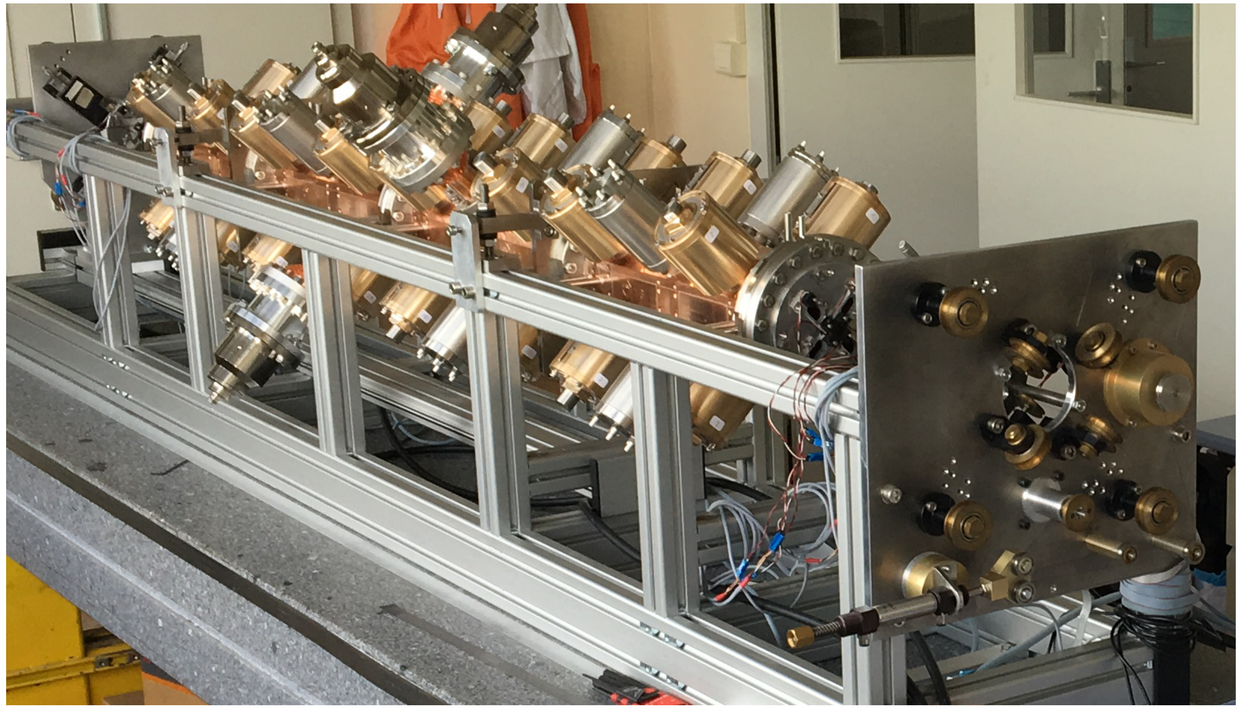

Component	Initial	Final
Q	±10.8 %	±1.0 %
Ds	±3.0 %	±1.0 %
Dt	±3.6 %	±1.7 %

Poster THPLR055

Summary

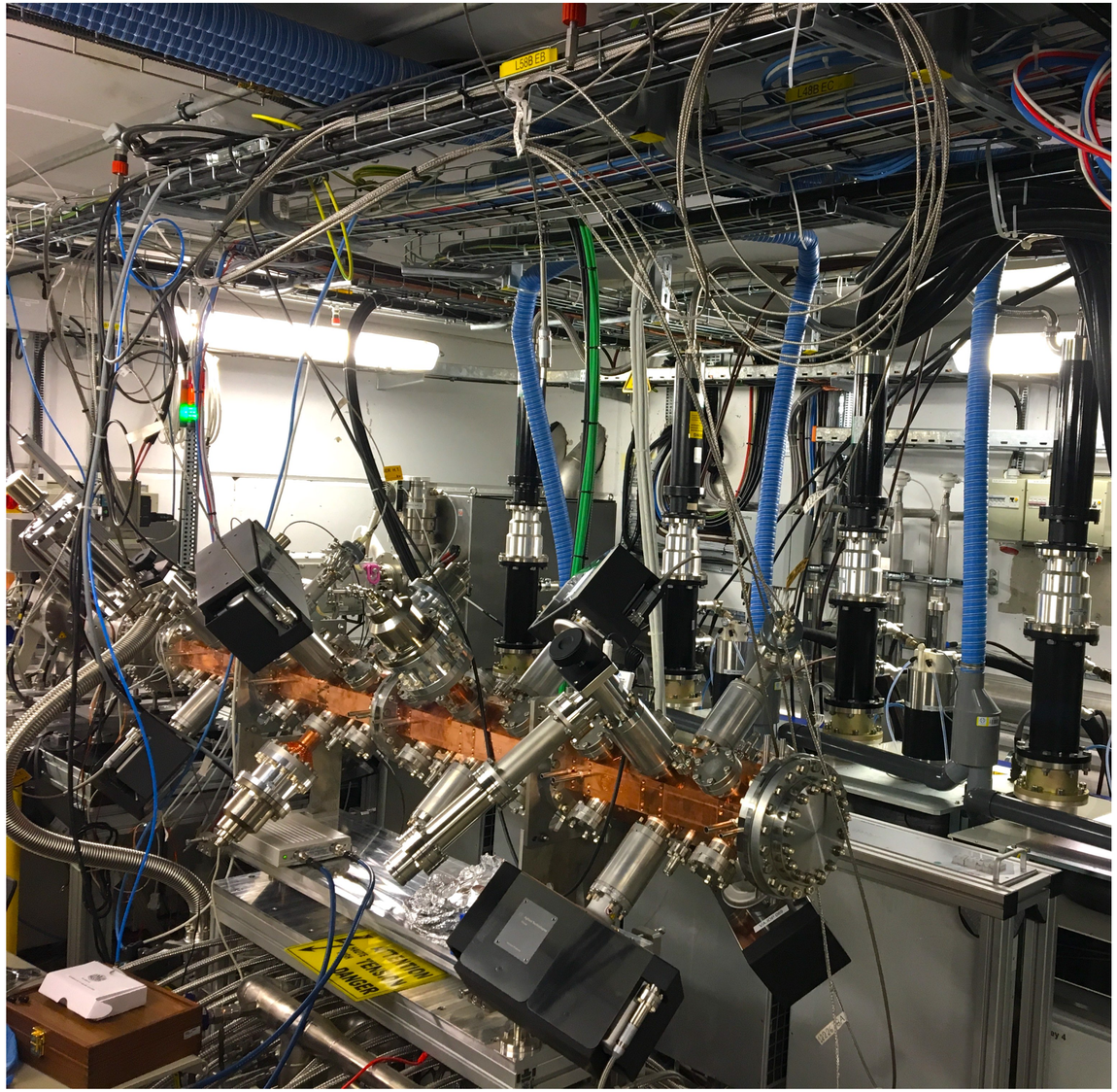

- RF measurements on 4-vane RFQs
- tuning of 4-vane RFQs
  - tuning algorithm / matrix inversion SVD
  - tuning procedure
- frequency tuning
- Q-values (multiple power couplers)
- antenna calibration

Poster THPLR055