Results From the Laserwire Emittance Scanner and Profile Monitor at CERN's Linac4

T. Hofmann, G. Boorman, A. Bosco, S. Gibson, K. Kruchinin (RHUL)
E. Bravin, U. Raich, F. Roncarolo (CERN)

29.09.2016

Thomas Hofmann
Royal Holloway, University of London
CERN - Beam Instrumentation Group
thomas.hofmann@cern.ch

CERN Accelerator overview

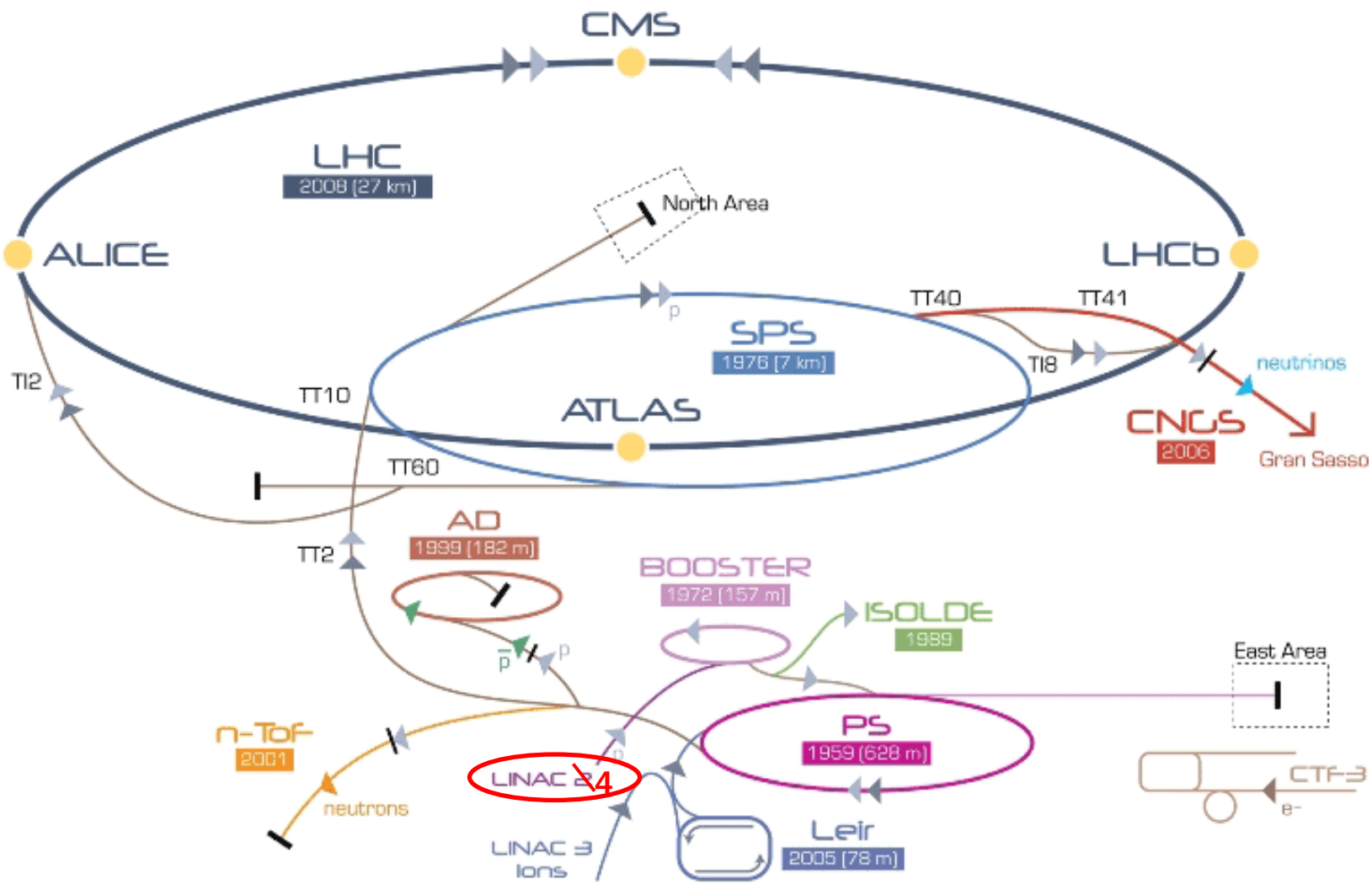

thomas.hofmann@cern.ch

LINAC 4 overview - Outline

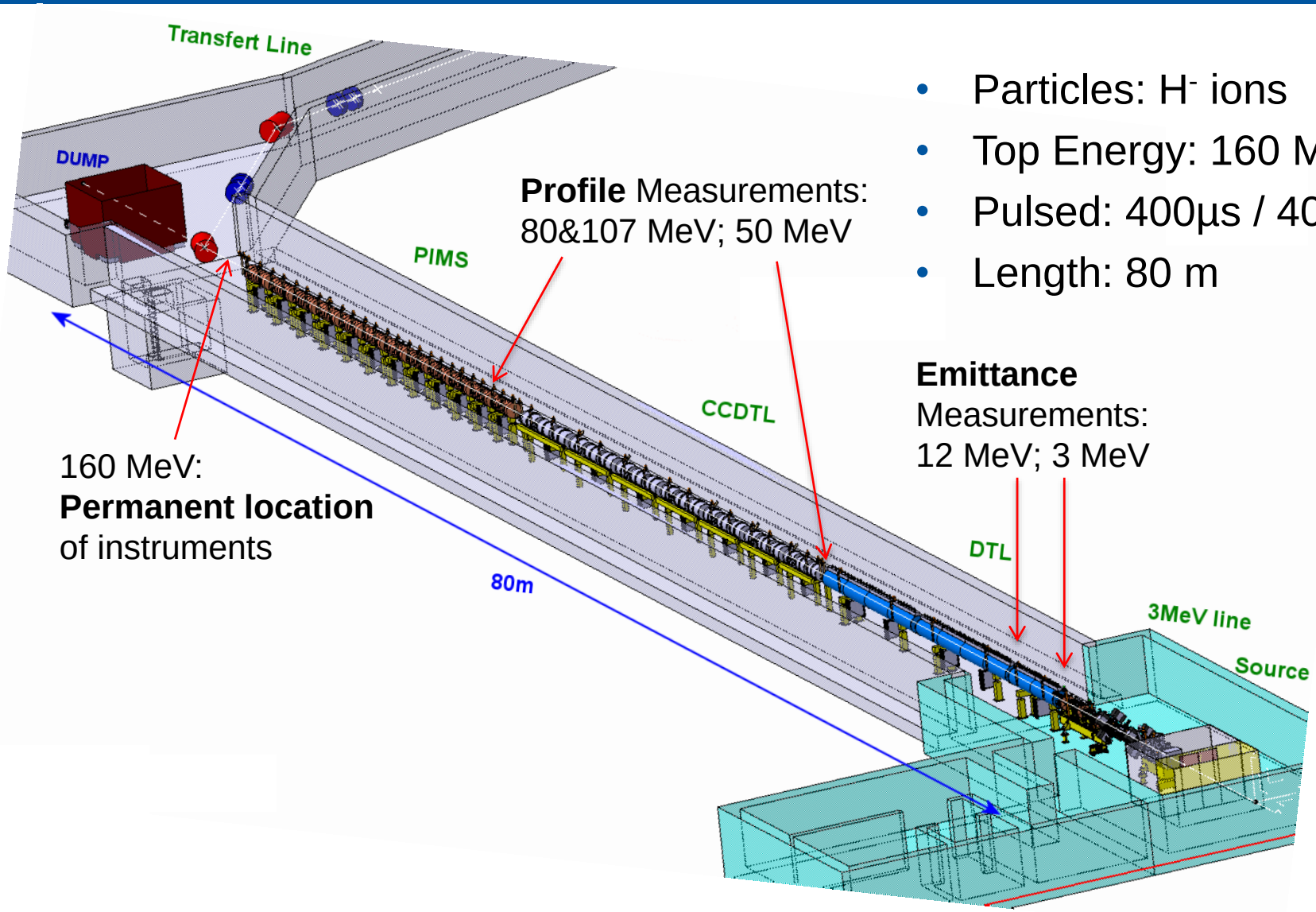

Profile Measurements:
80&107 MeV; 50 MeV

160 MeV:
Permanent location
of instruments

Emittance
Measurements:
12 MeV; 3 MeV

- Particles: H^- ions
- Top Energy: 160 MeV
- Pulsed: 400µs / 40 mA
- Length: 80 m

thomas.hofmann@cern.ch

Concept of Non-destructive Emittance Meter

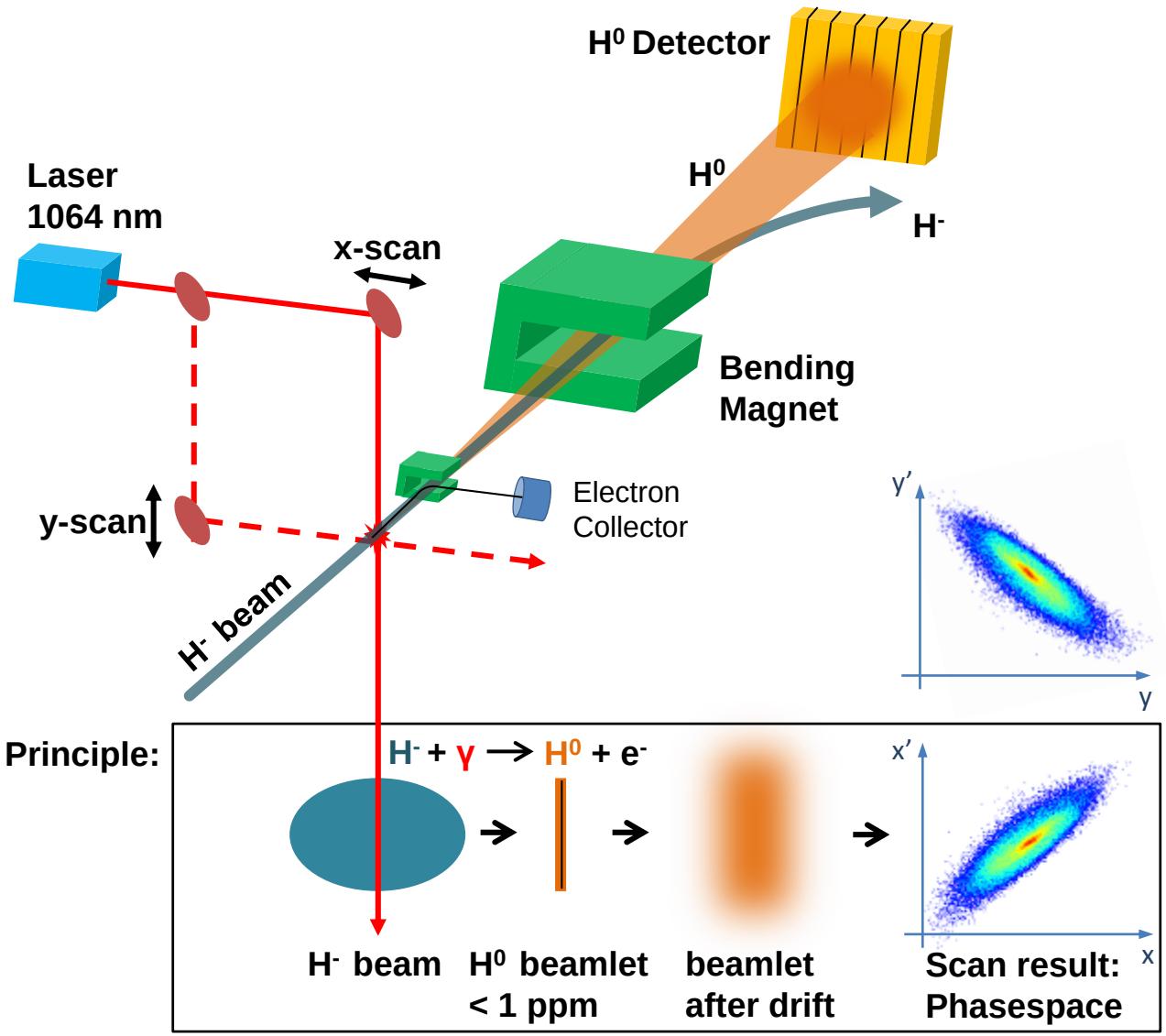

thomas.hofmann@cern.ch

LINAC 4 overview

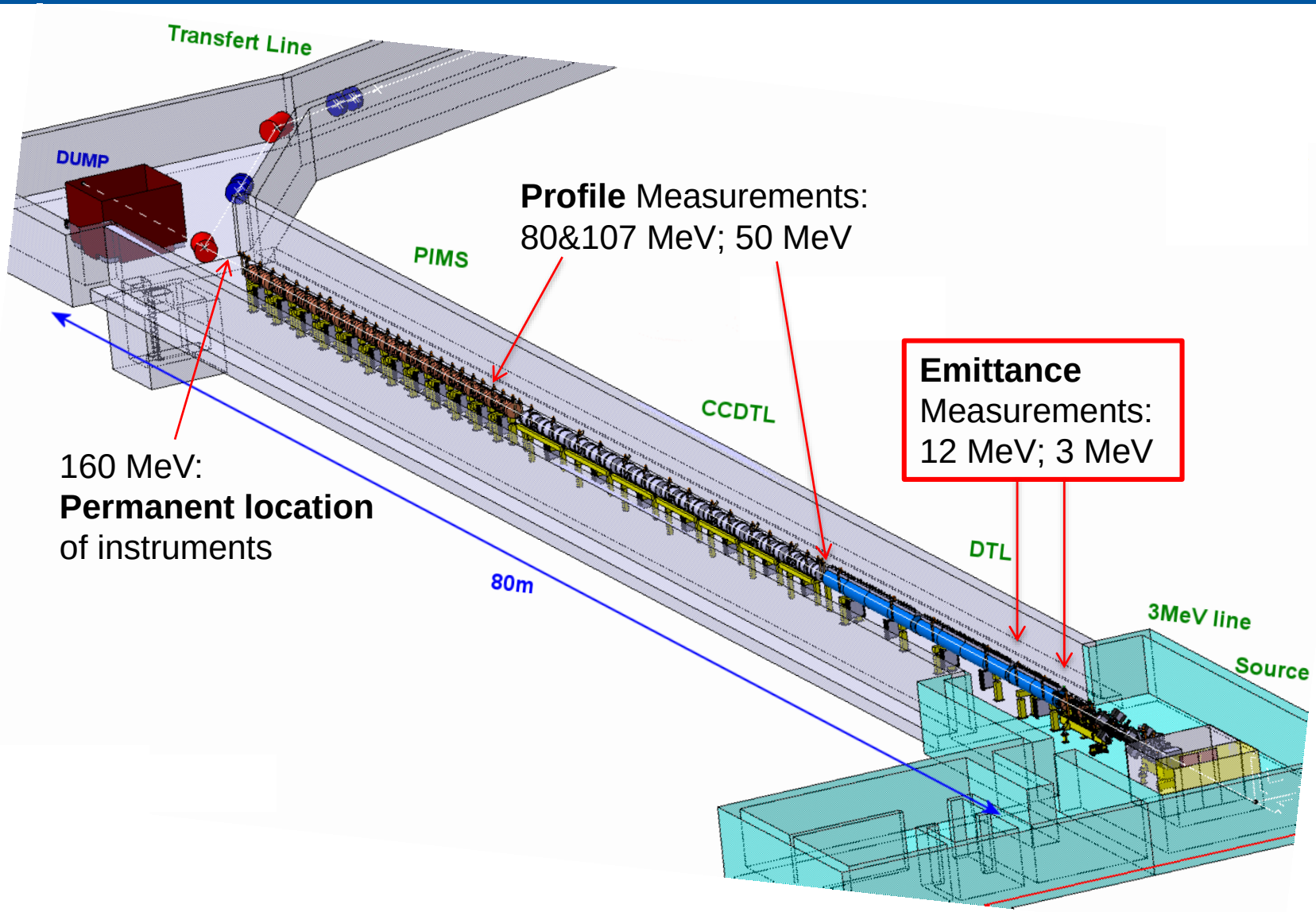

thomas.hofmann@cern.ch

3 / 12 MeV Prototype Test Setup

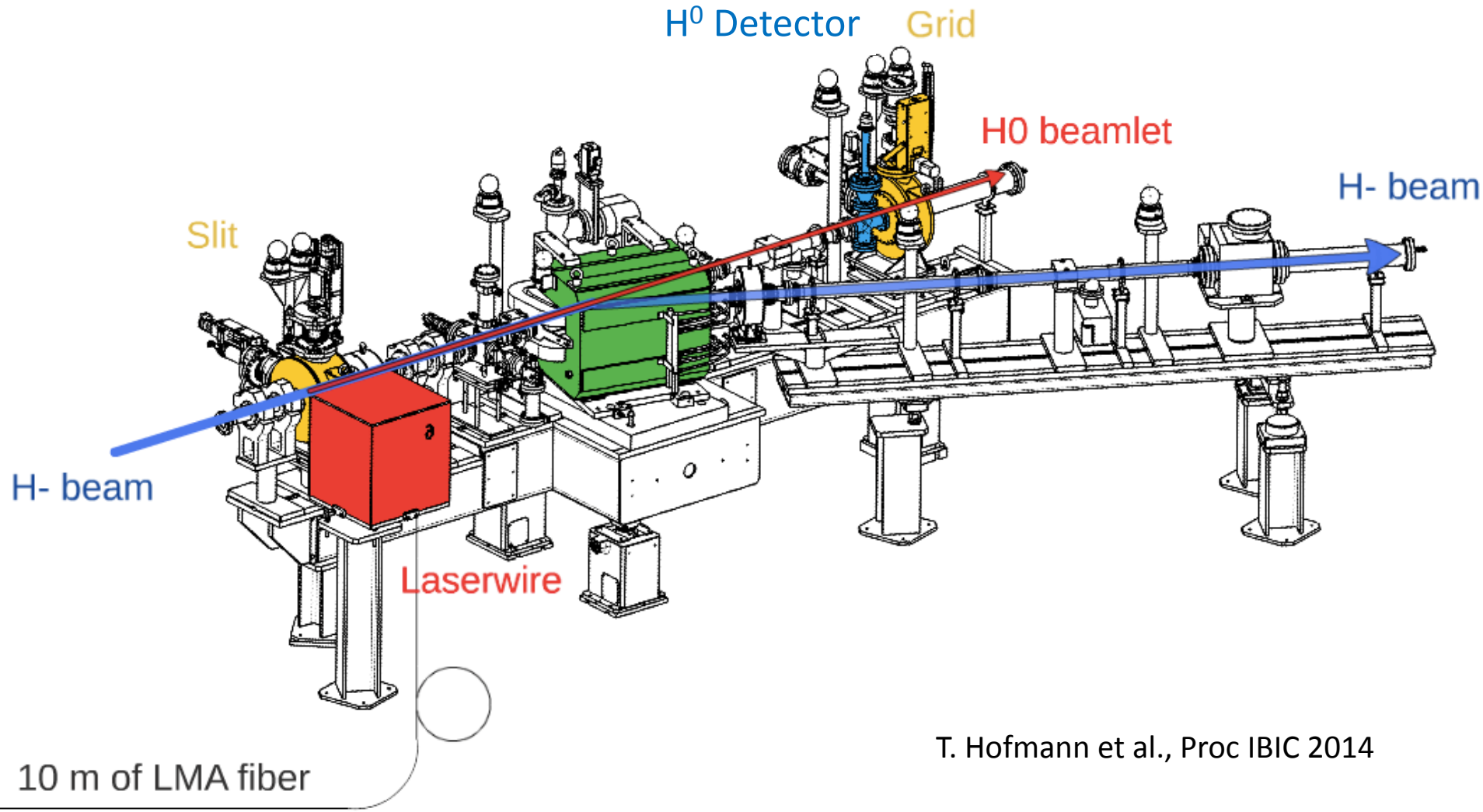

T. Hofmann et al., Proc IBIC 2014

thomas.hofmann@cern.ch

Laser Injector - Setup

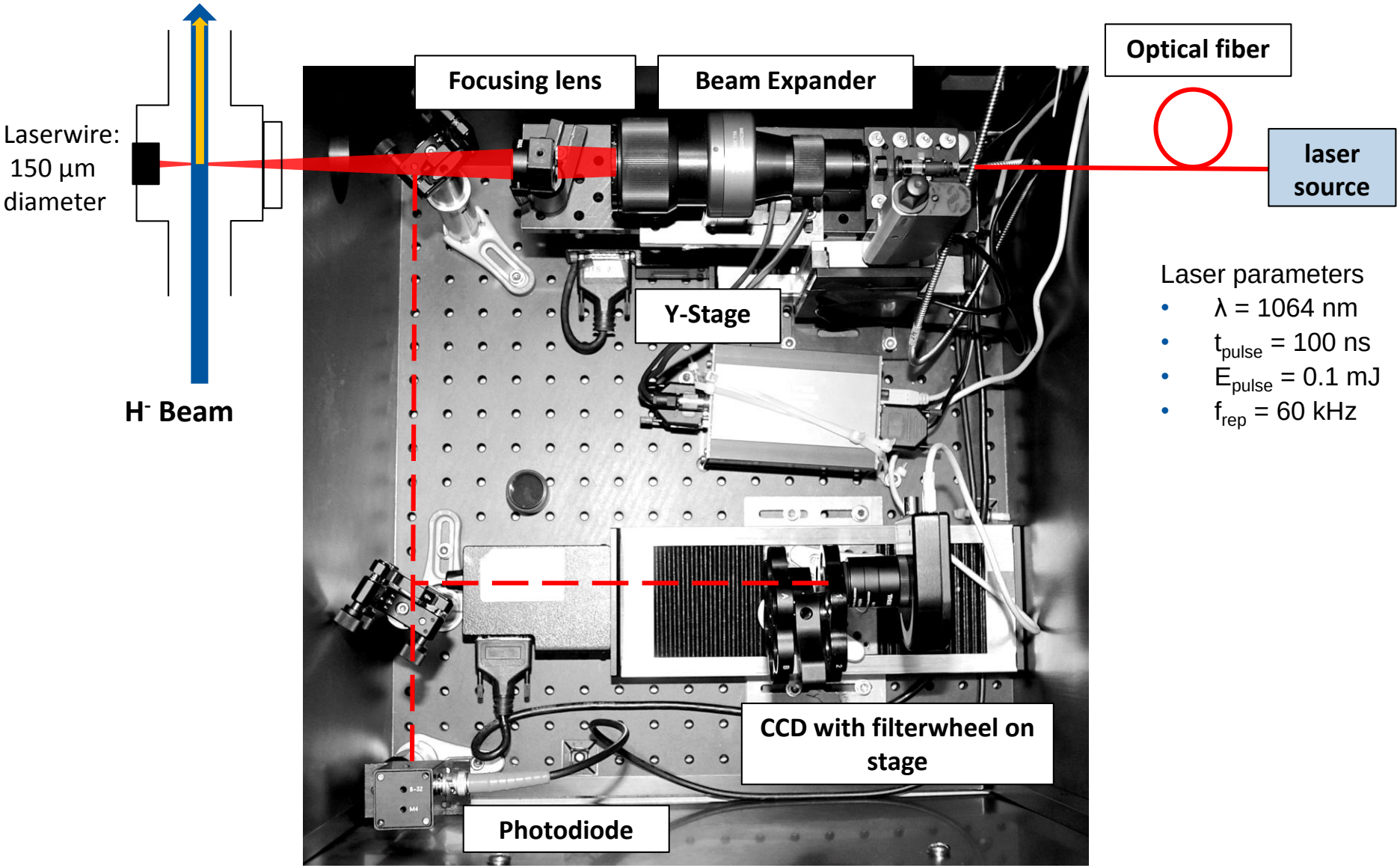

Laser parameters

- λ = 1064 nm
- t_{pulse} = 100 ns
- E_{pulse} = 0.1 mJ
- f_{rep} = 60 kHz

thomas.hofmann@cern.ch

H^0 Detection: Diamond Strip Detector

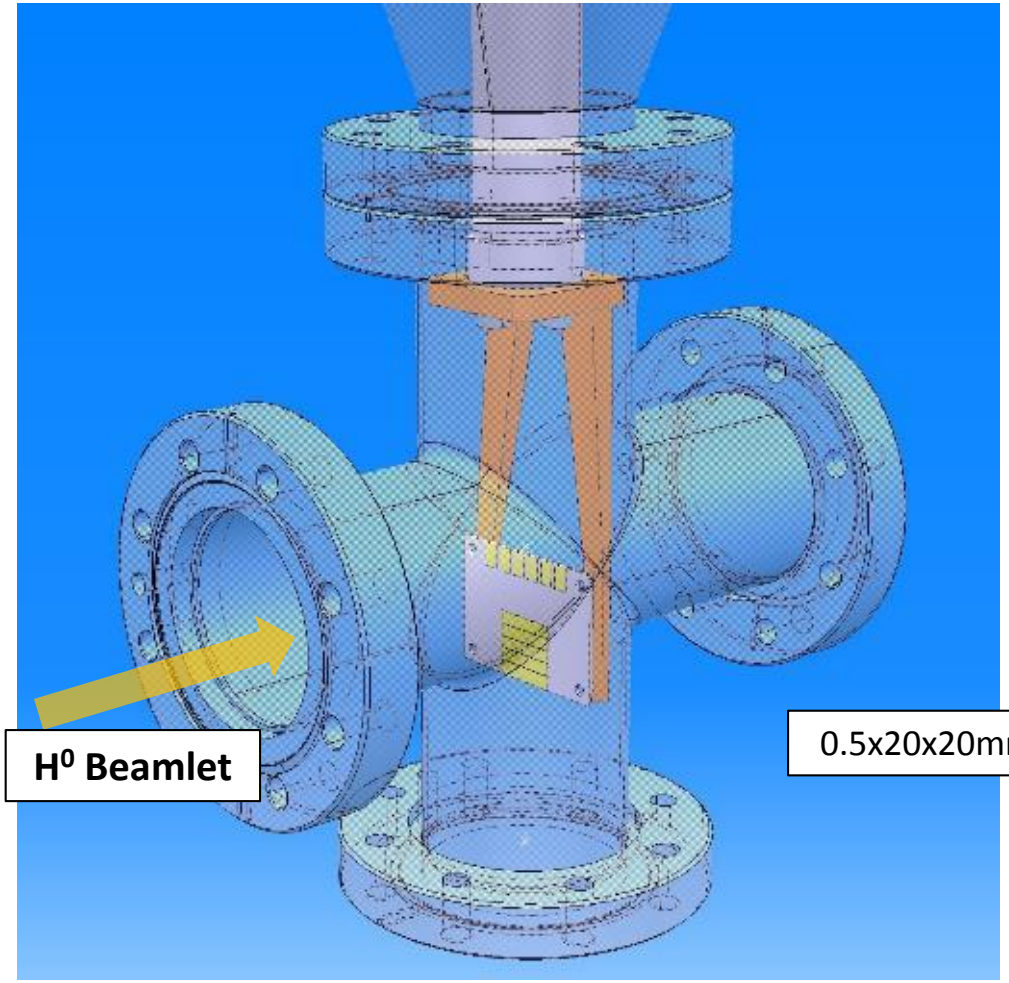

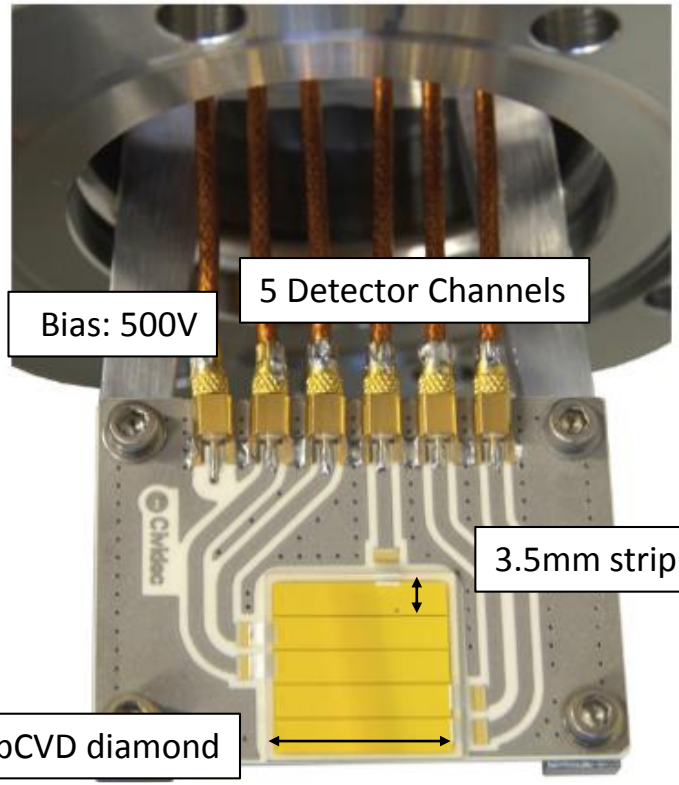

Ref: CIVIDEC Instrumentation, Austria

- ~10^{15} H^0/cm^2 **radiation hardness**
- Nanosecond time response
- ~10^4 e-/H^0 sensitivity

thomas.hofmann@cern.ch

Diamond Raw Signal & Signal Analysis

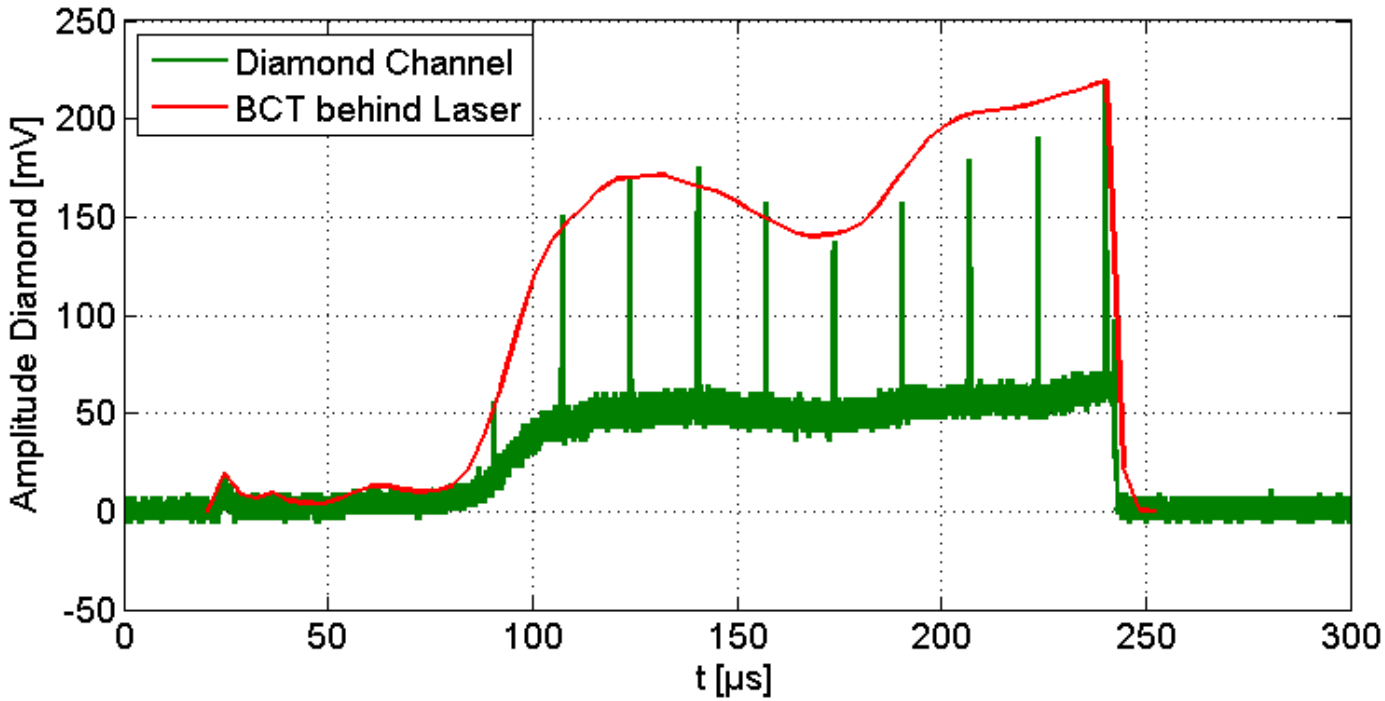

thomas.hofmann@cern.ch

Diamond Raw Signal & Signal Analysis

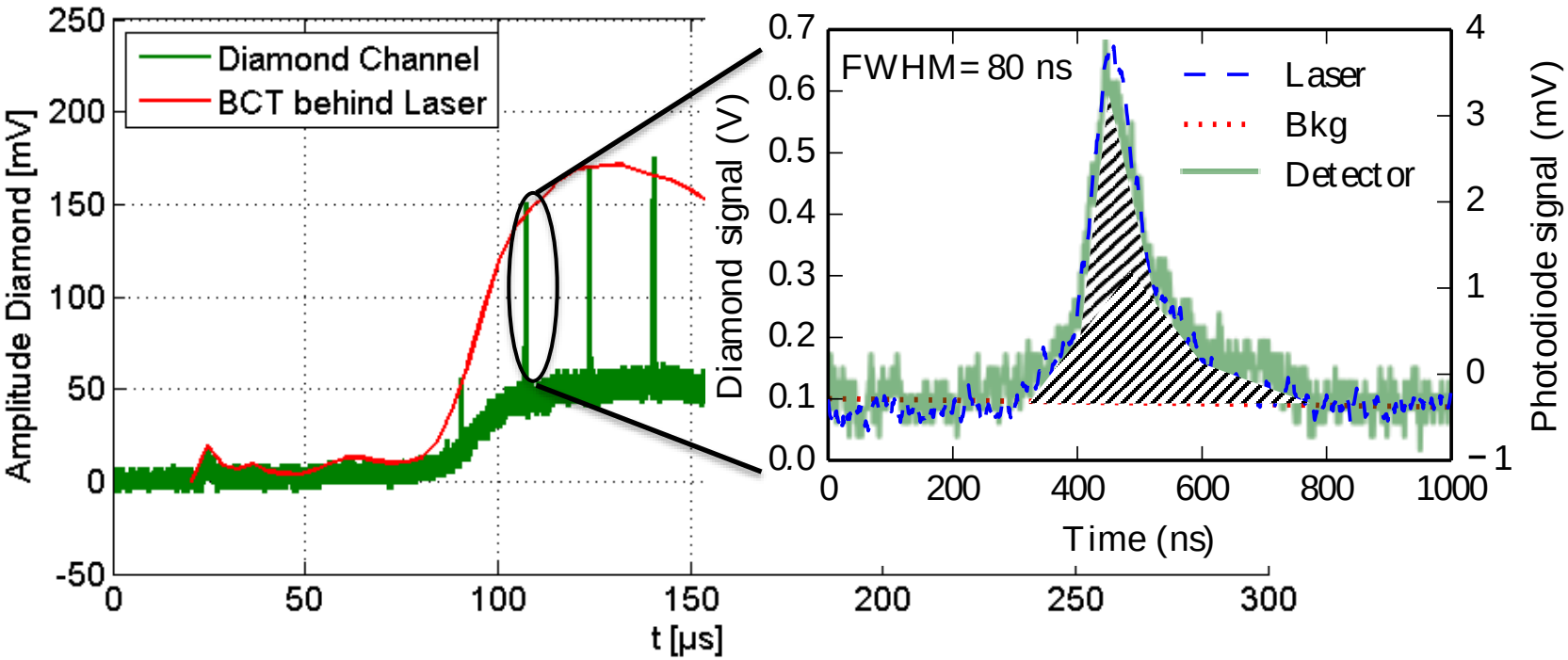

- H^0 particles originating from laserpulses
- Background from H^0, produced by residual gas collisions
- $\int (V_{Diamond}$ – background fit) → 1 point in Phasespace

thomas.hofmann@cern.ch

3 / 12 MeV Prototype Test Setup

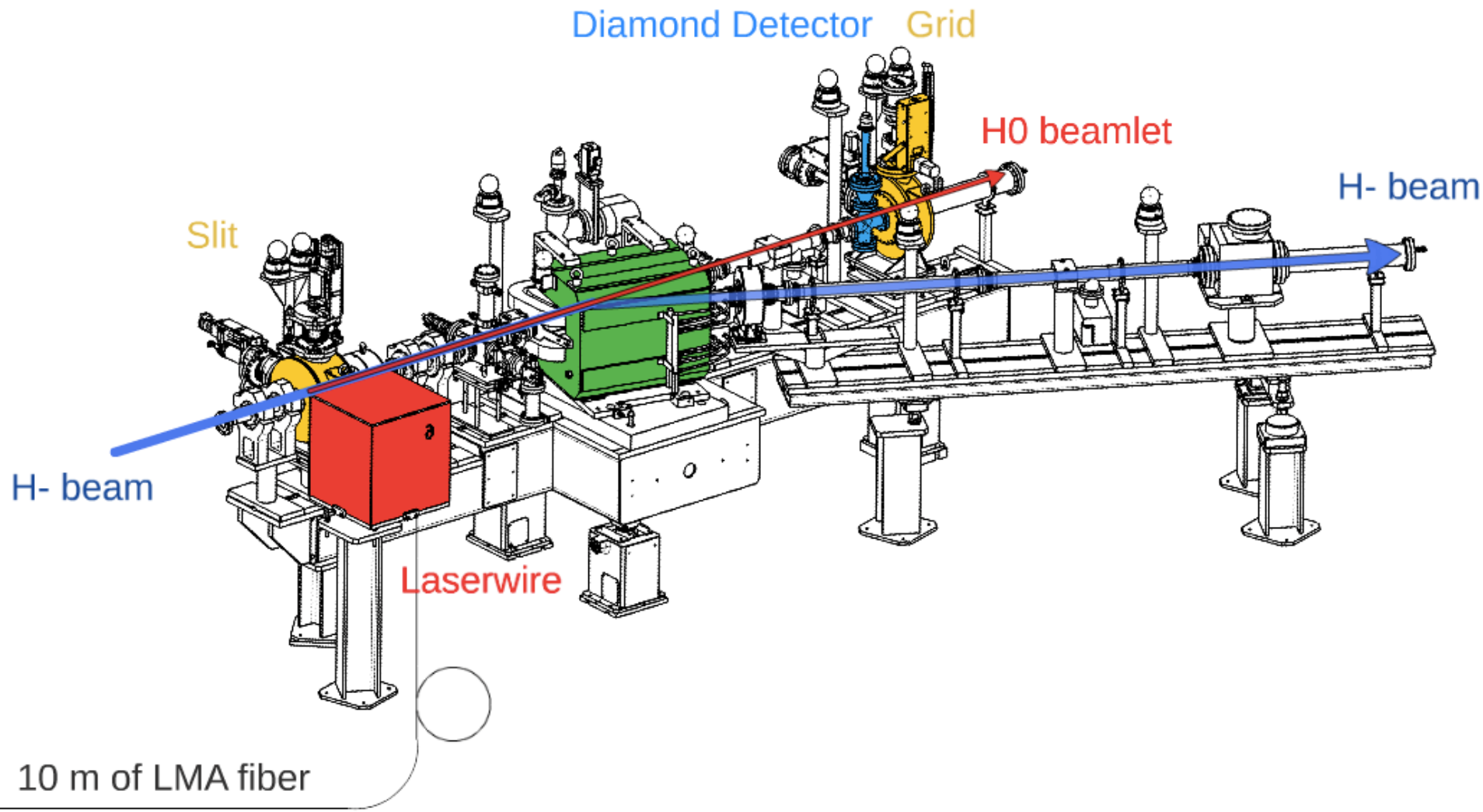

thomas.hofmann@cern.ch

Results – Comparison with Slit & Grid

Phase-space

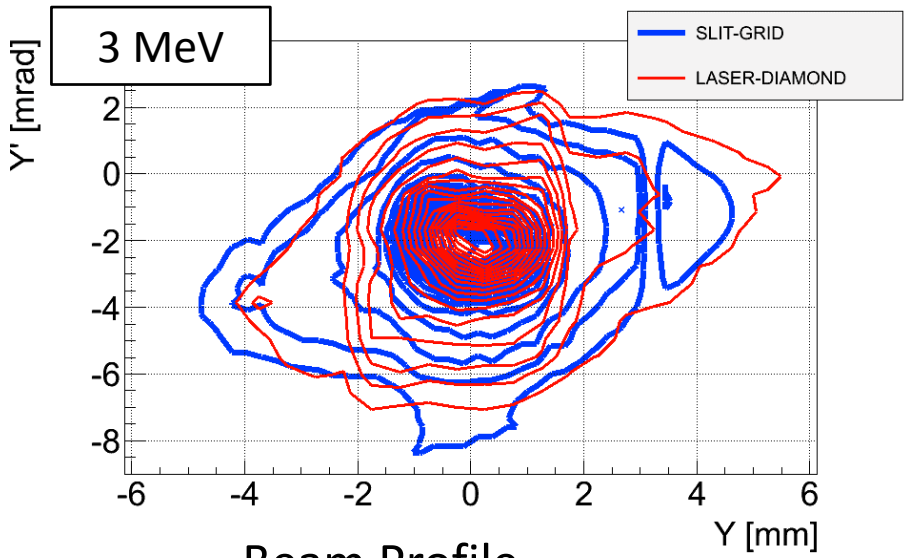

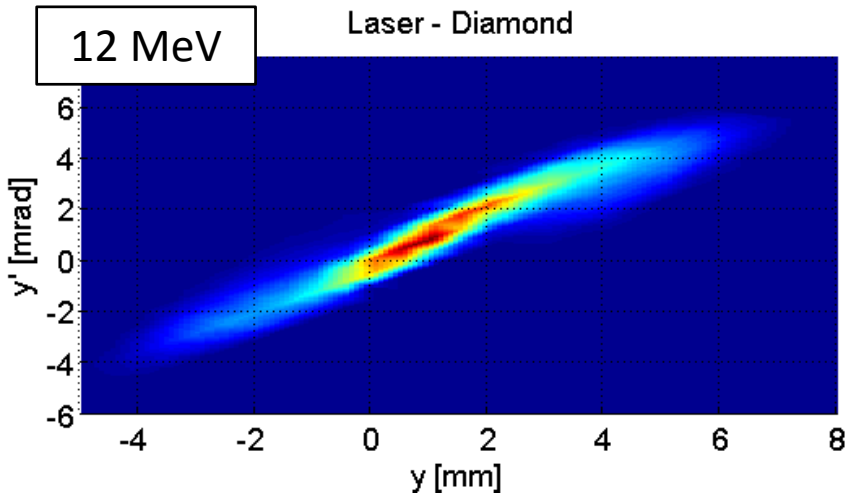

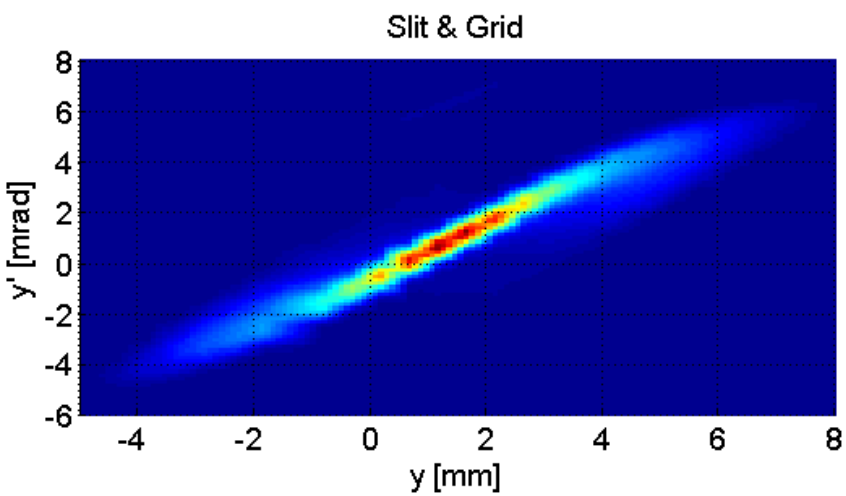

Beam Profile

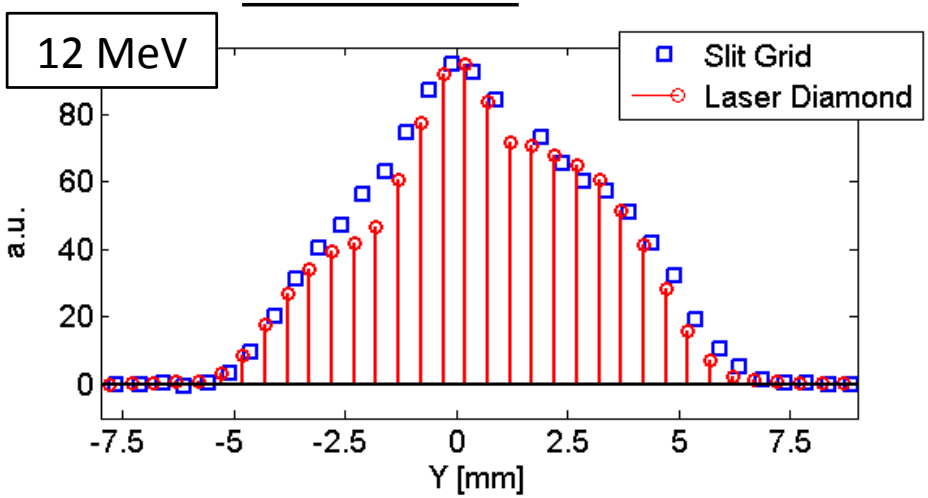

thomas.hofmann@cern.ch

Results – Comparison with Slit & Grid

Phase-space

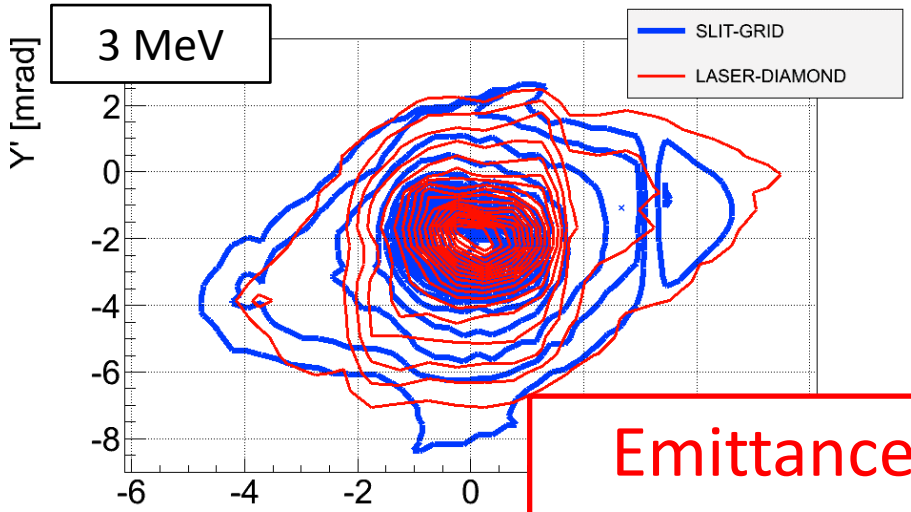

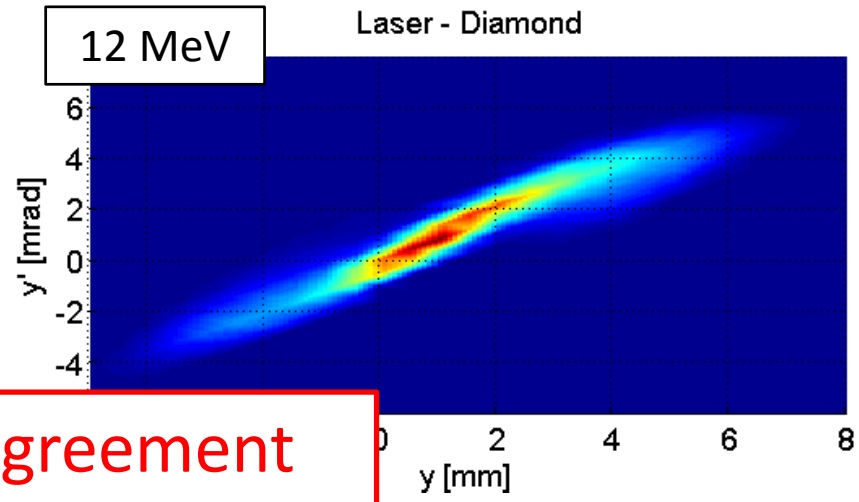

Emittance agreement within +/- 3%

Beam Profile

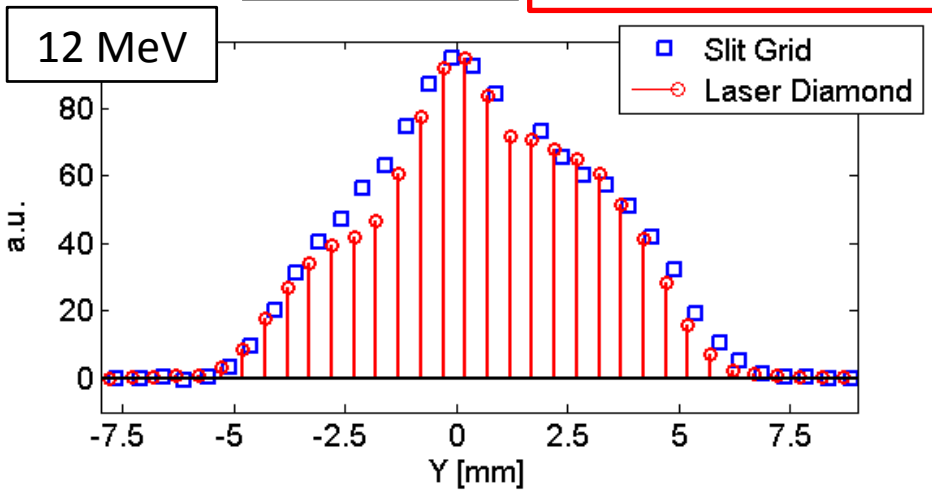

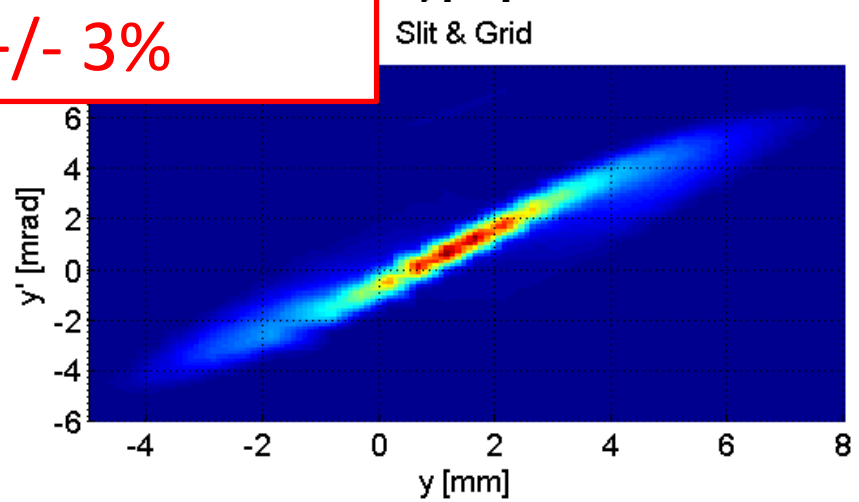

thomas.hofmann@cern.ch

LINAC 4 overview

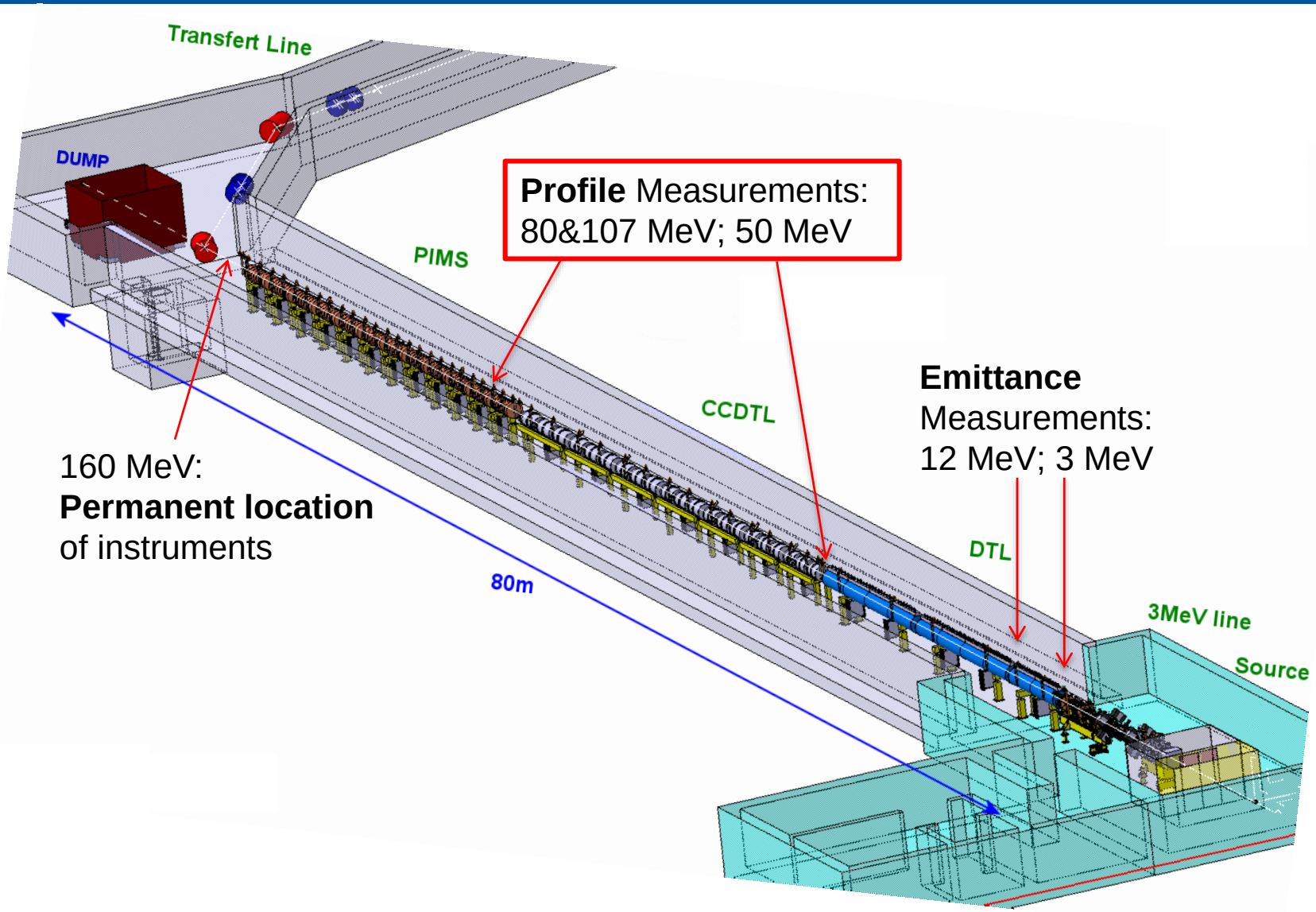

thomas.hofmann@cern.ch

50/80/107 MeV Testbench

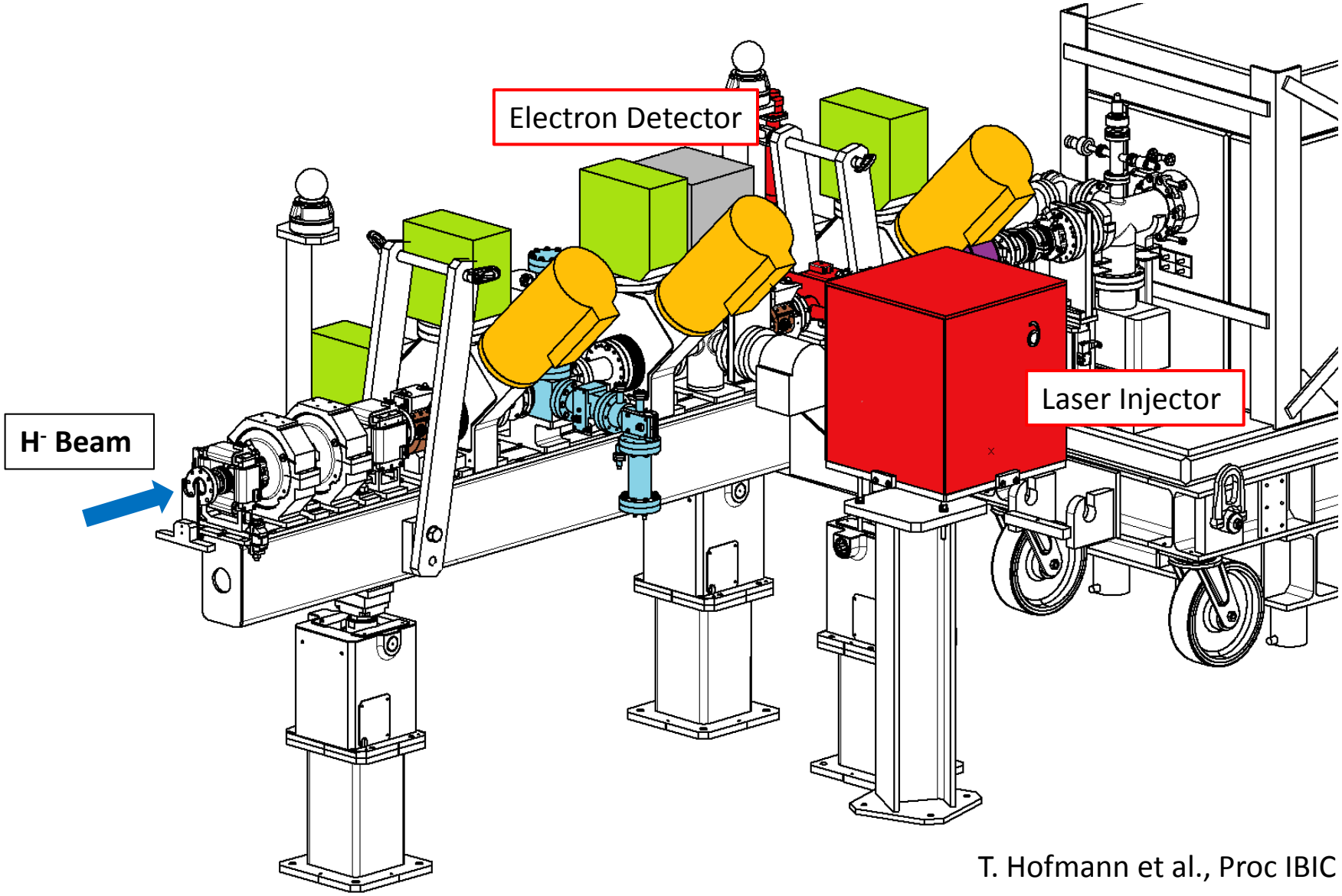

T. Hofmann et al., Proc IBIC 2015

thomas.hofmann@cern.ch

50/80/107 MeV – Profiling setup

- 90° Deflection of electrons by dipole magnet
  $\int B < 1mTm$
- Effect on main
  H^- beam negligible
- Electron collection
  with sCVD Diamond
- Resolution: 150 µm laser diameter

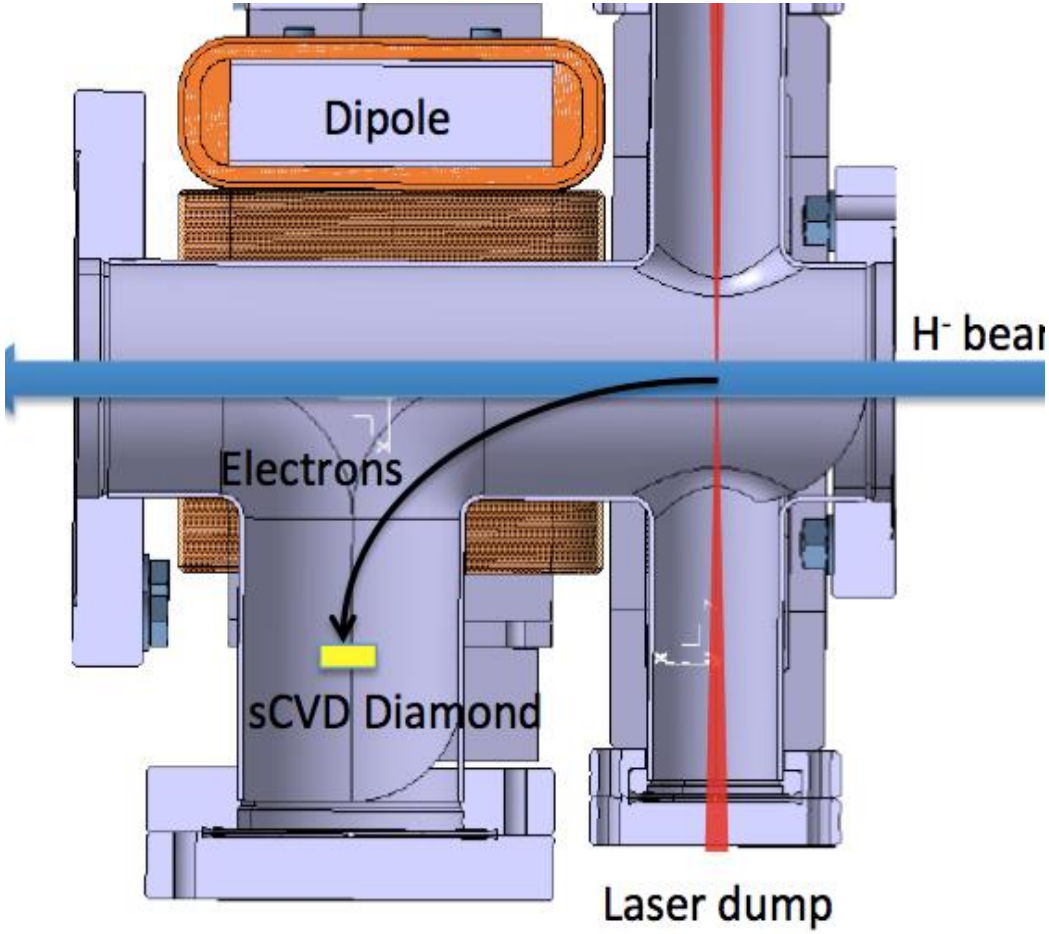

T. Hofmann et al., Proc IBIC 2015

thomas.hofmann@cern.ch

sCVD Detector for Electron Detection

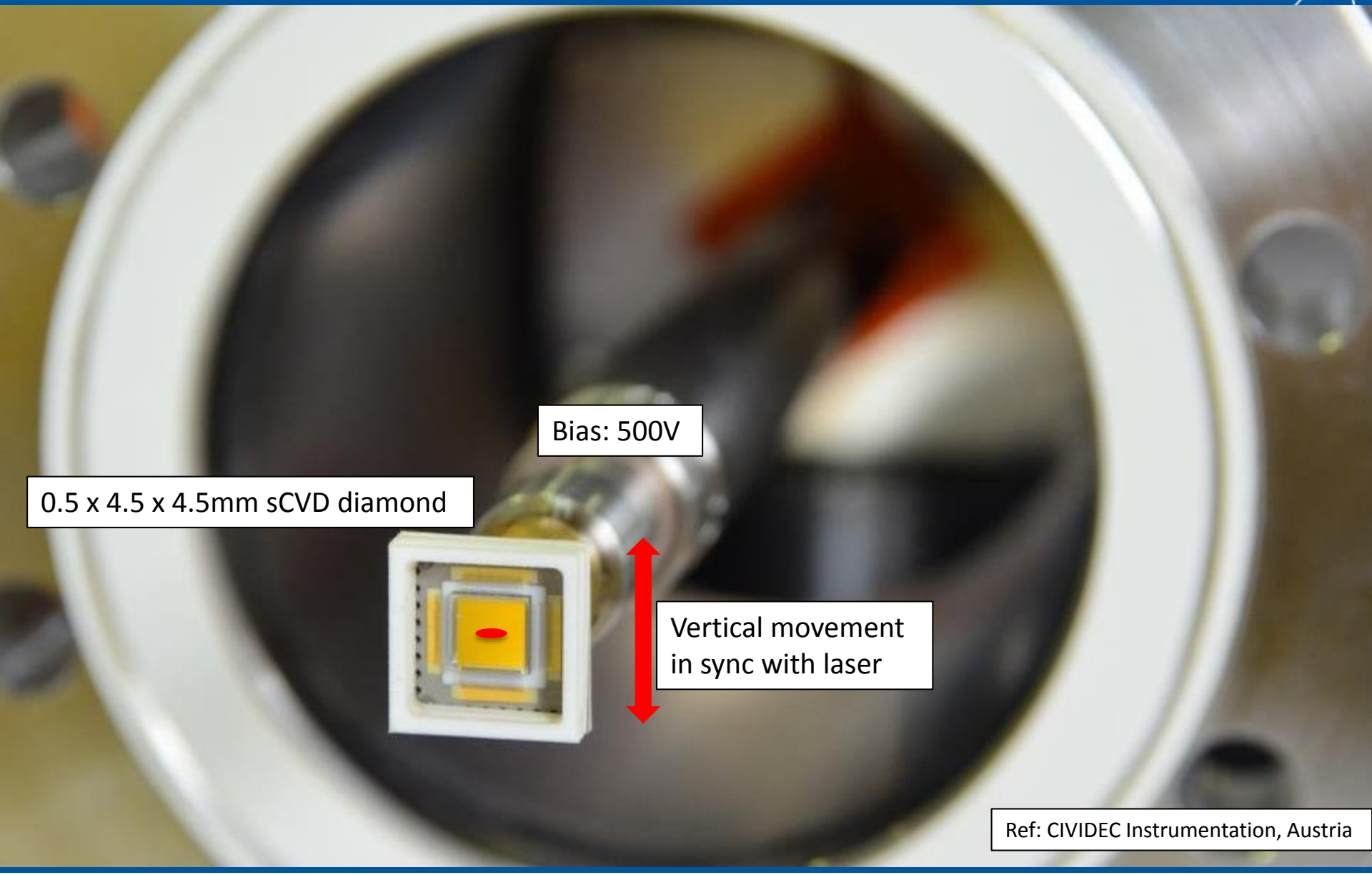

Ref: CIVIDEC Instrumentation, Austria

thomas.hofmann@cern.ch

Installation on Testbench

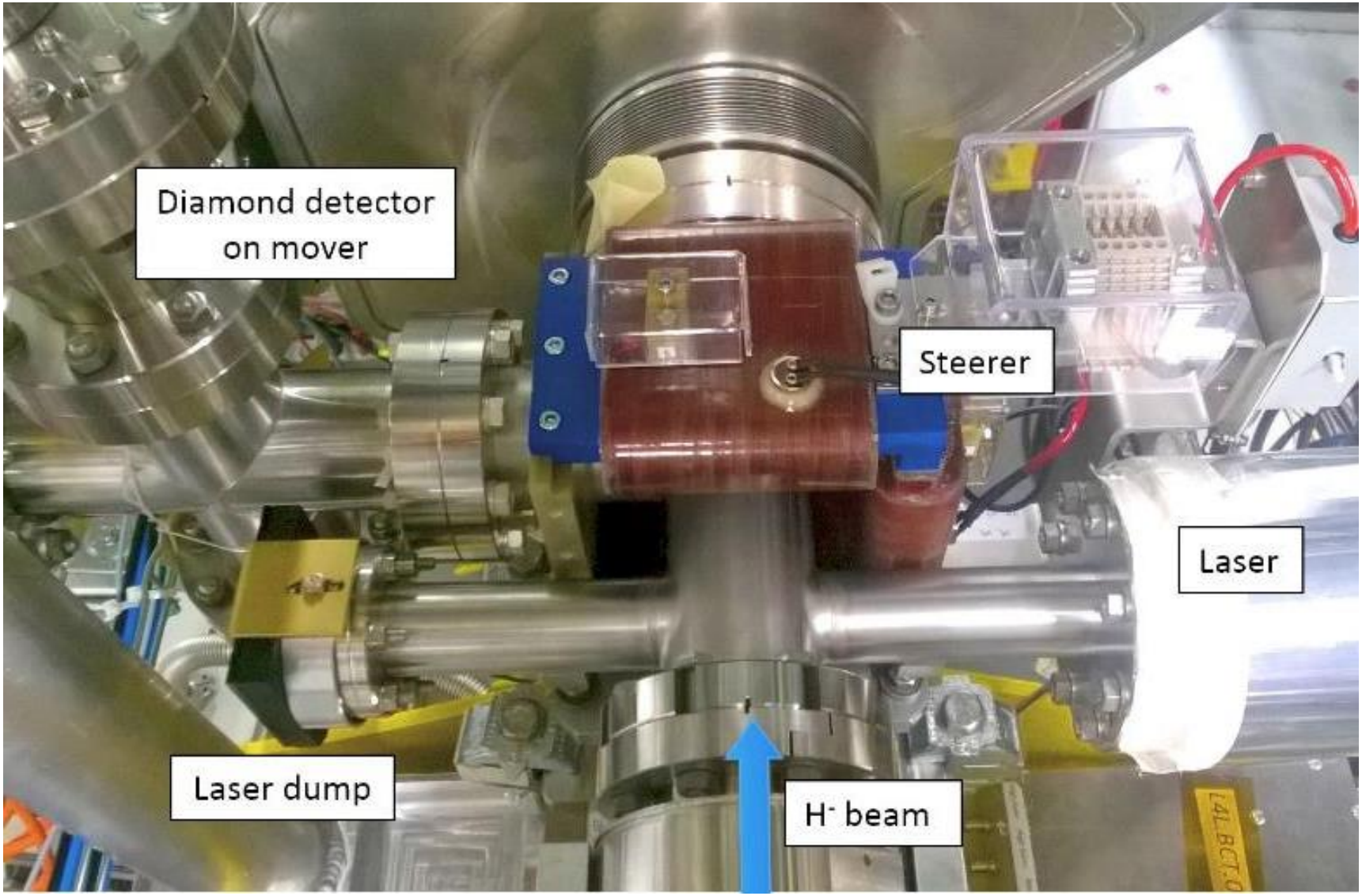

thomas.hofmann@cern.ch

Profile Comparison

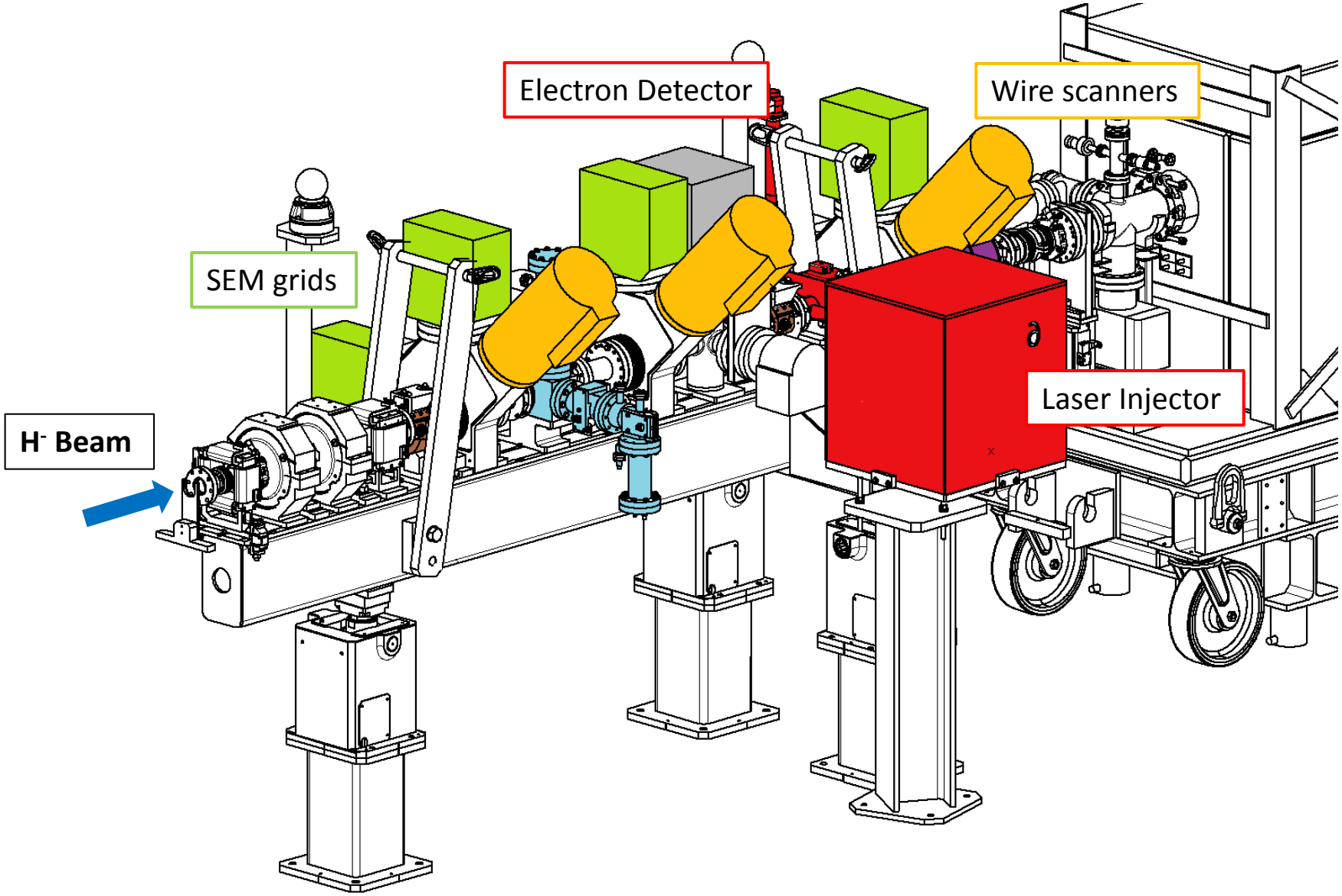

thomas.hofmann@cern.ch

Profile Comparison

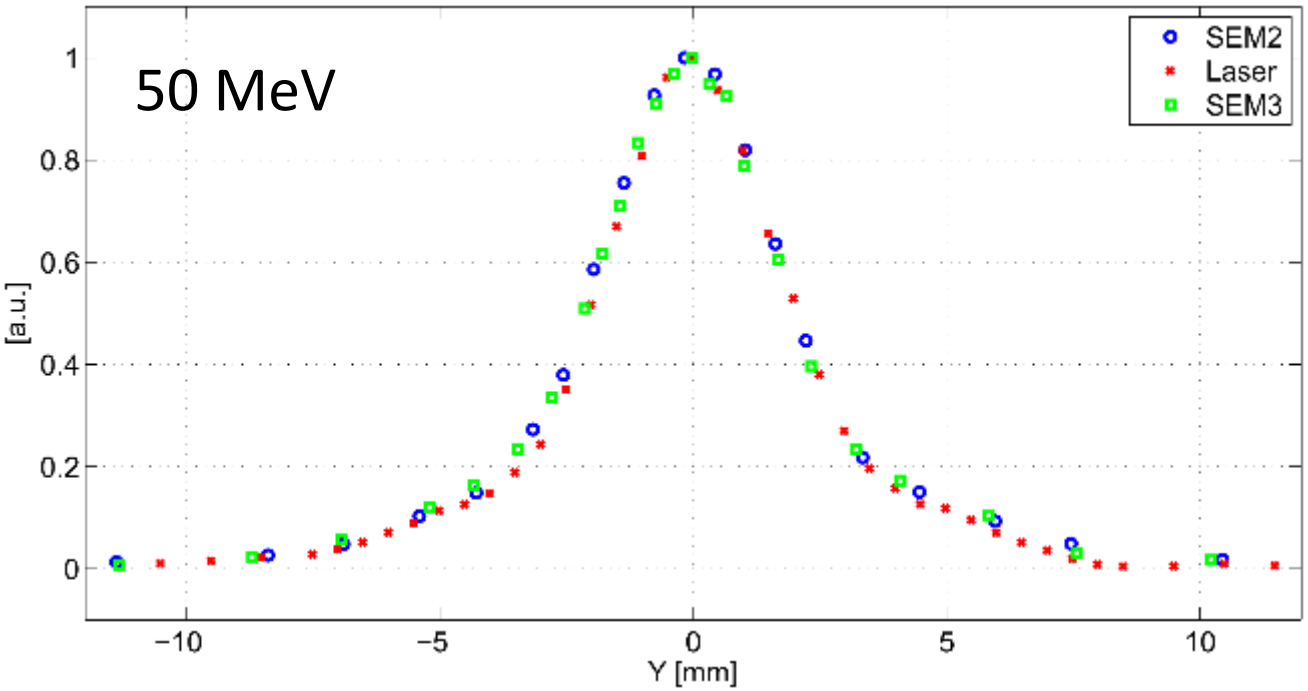

S. Gibson et al., Proc IBIC 2016

thomas.hofmann@cern.ch

Profile Comparison

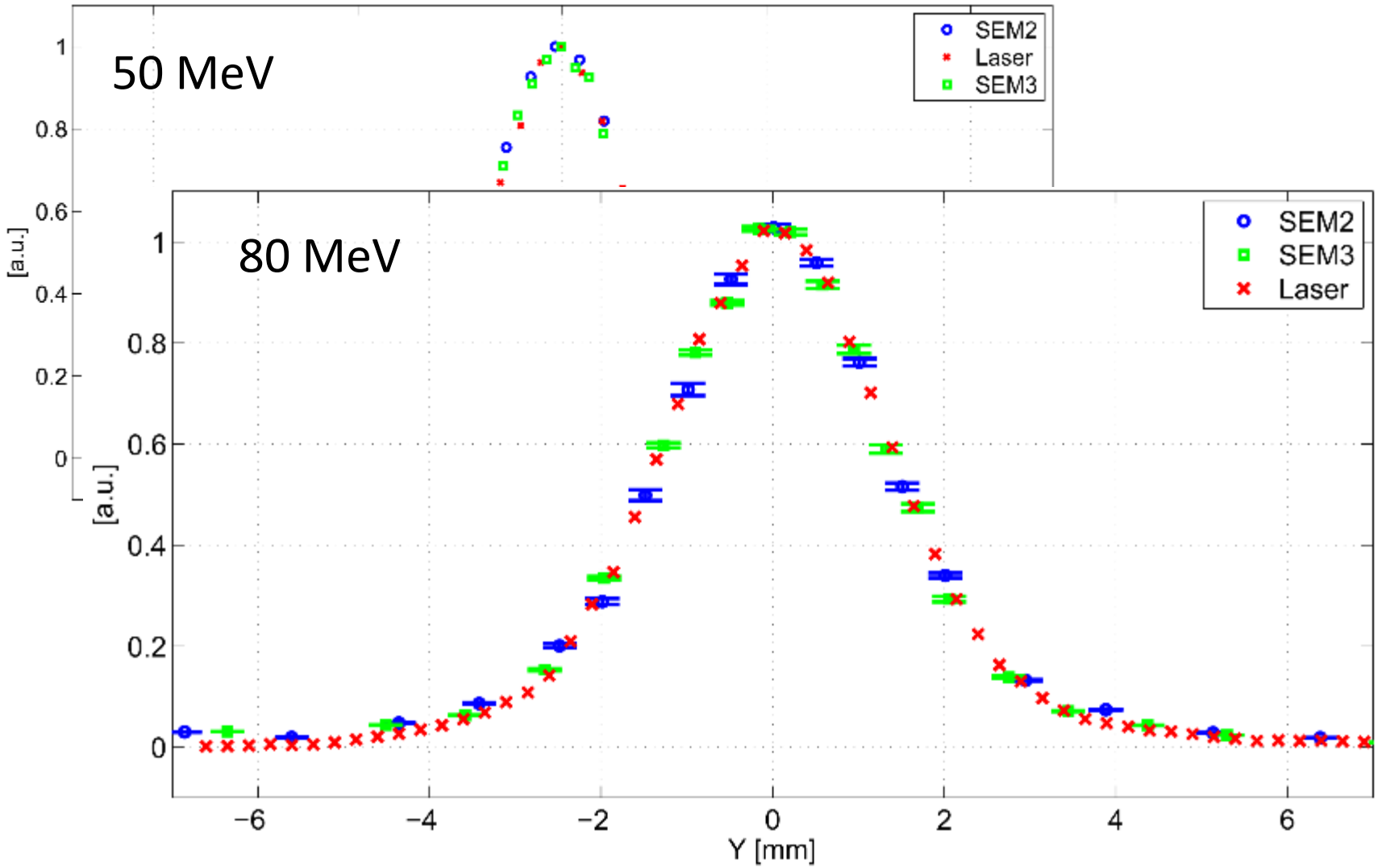

S. Gibson et al., Proc IBIC 2016

thomas.hofmann@cern.ch

Profile Comparison

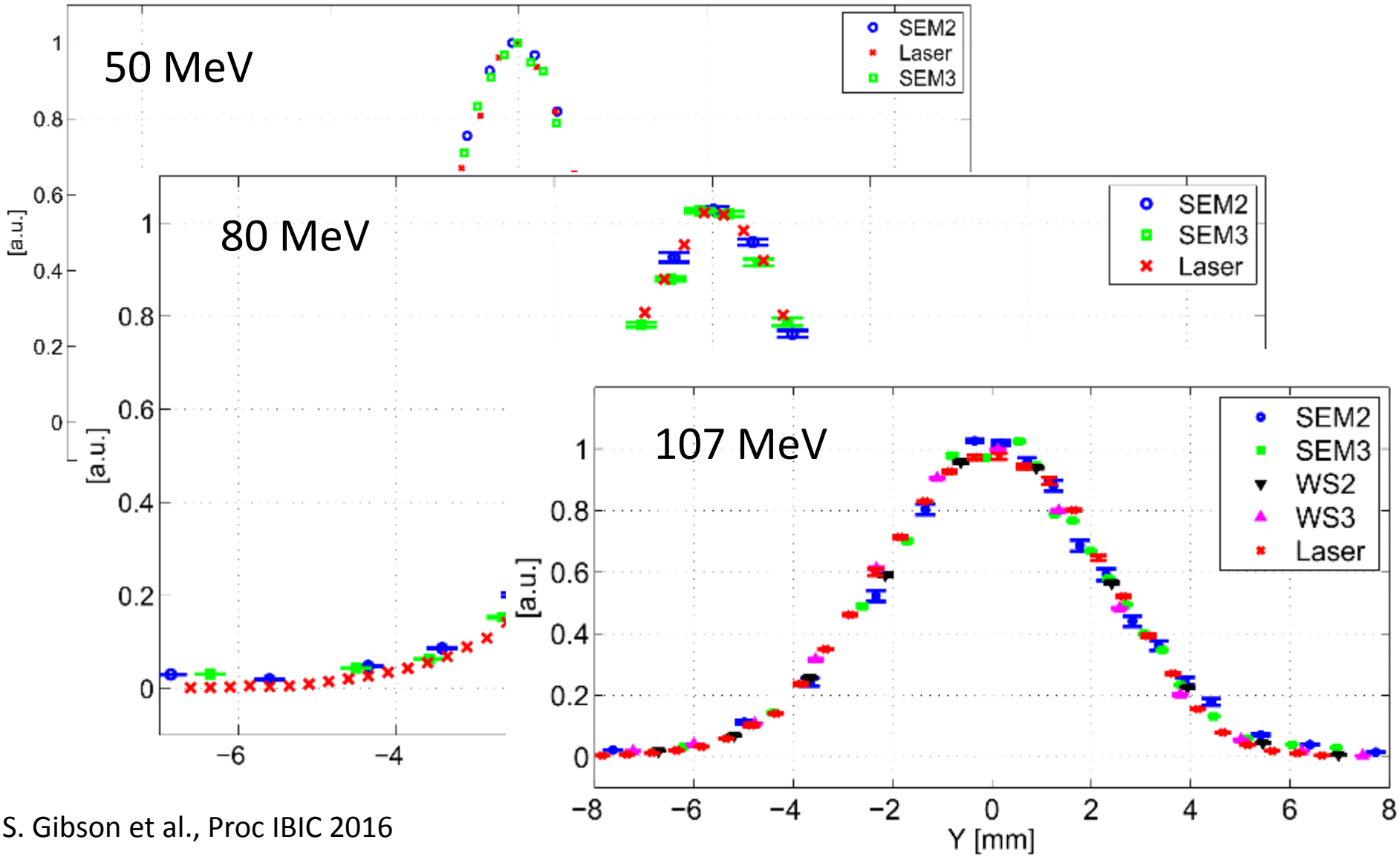

S. Gibson et al., Proc IBIC 2016

thomas.hofmann@cern.ch

Profile Comparison

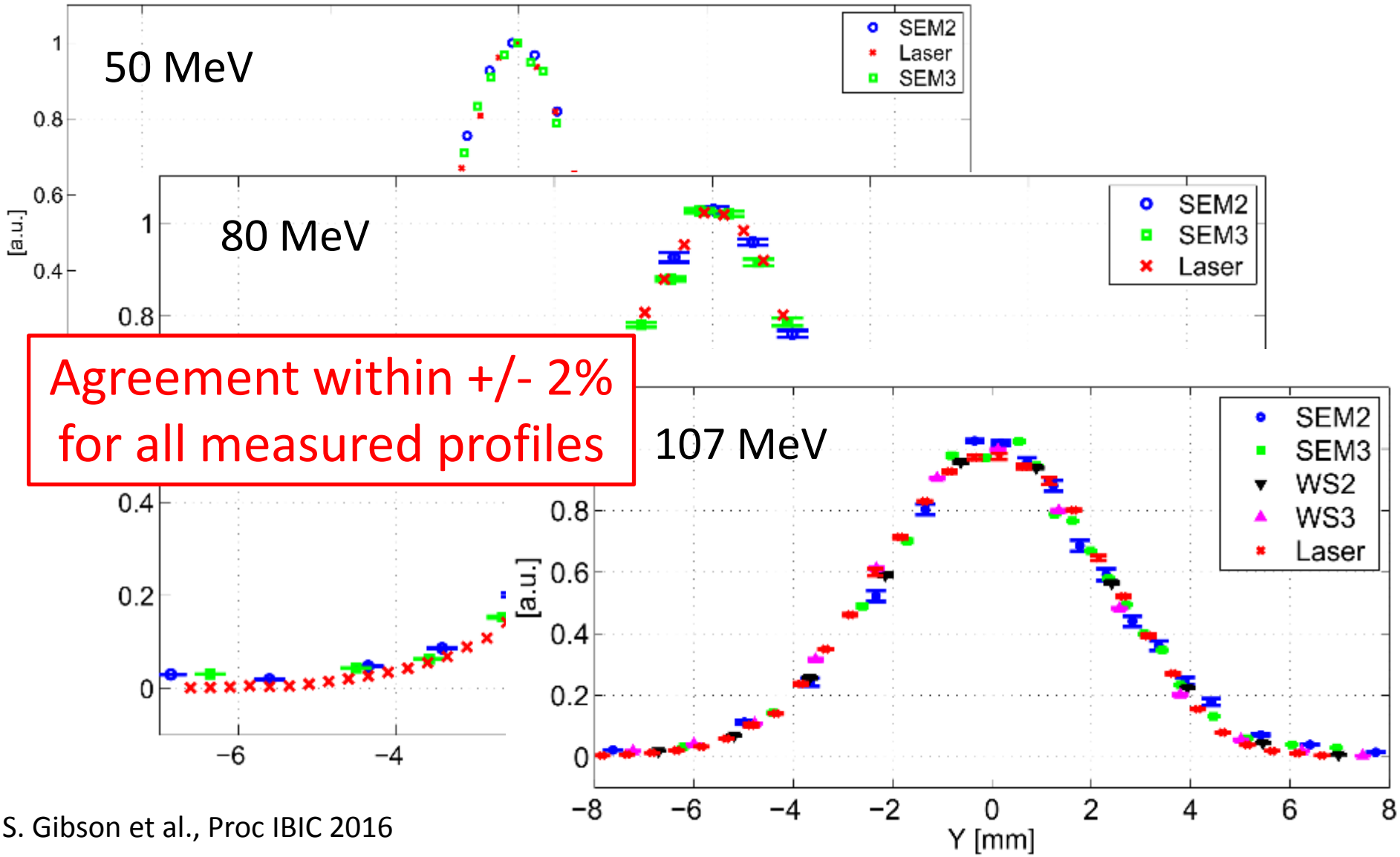

Agreement within +/- 2% for all measured profiles

S. Gibson et al., Proc IBIC 2016

thomas.hofmann@cern.ch

LINAC 4 overview

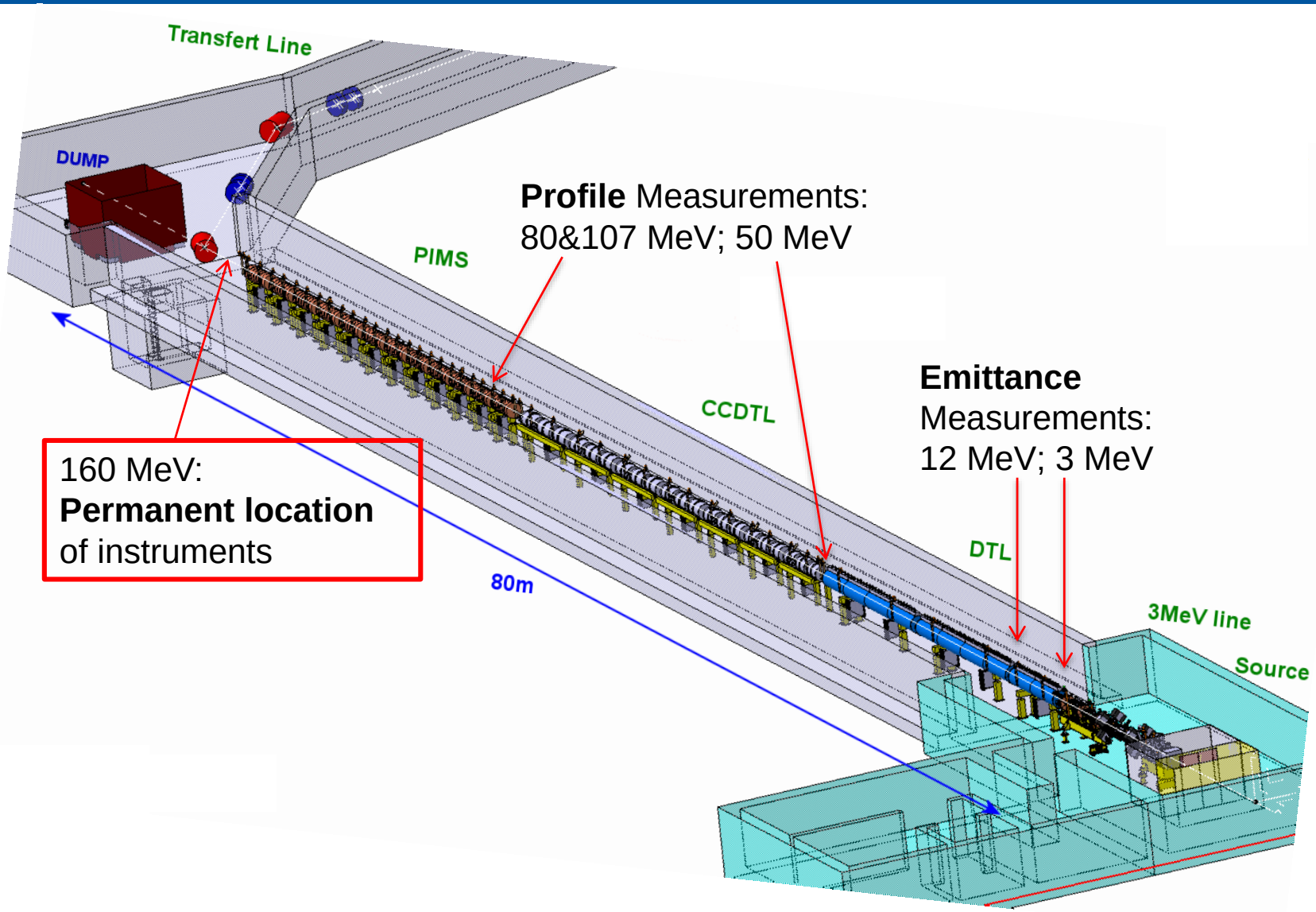

thomas.hofmann@cern.ch

Final instrument design

- Situation at LINAC4 top energy region

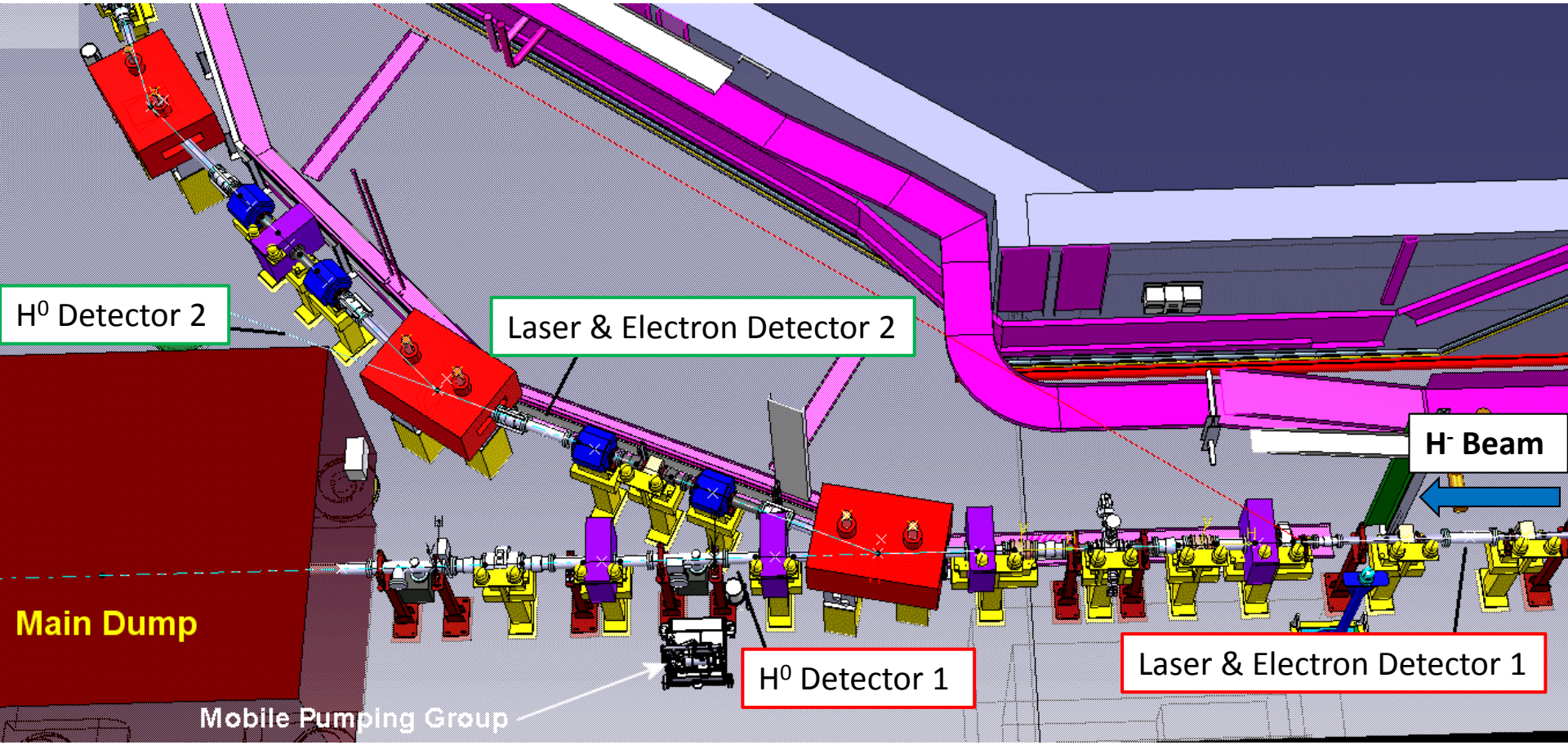

thomas.hofmann@cern.ch

Final Laser Setup

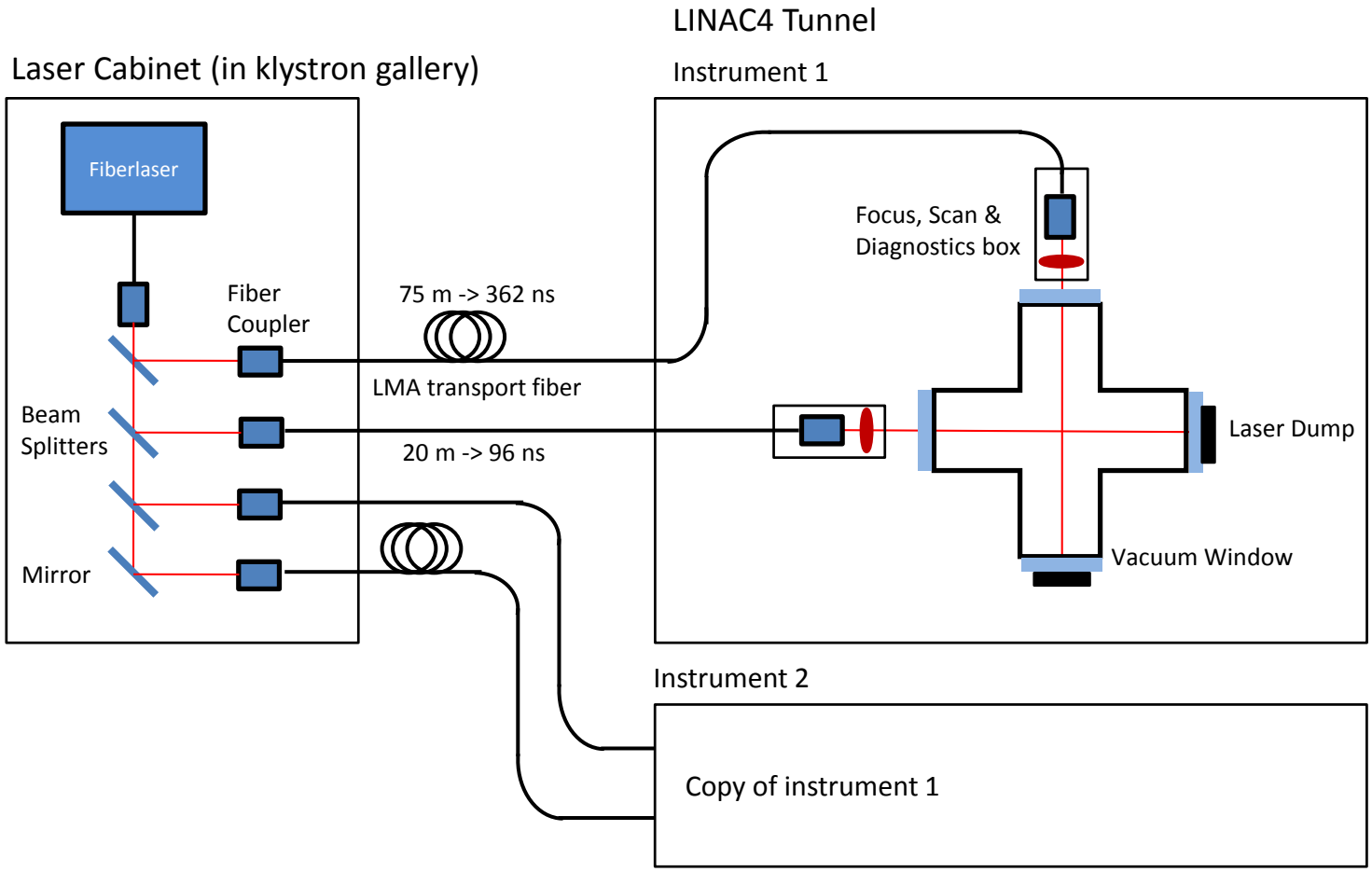

- **Simultaneous measurement of horizontal & vertical plane**
  - Different fiber length → 266 ns **time difference**

thomas.hofmann@cern.ch

Laser and Electron Collector setup at beampipe

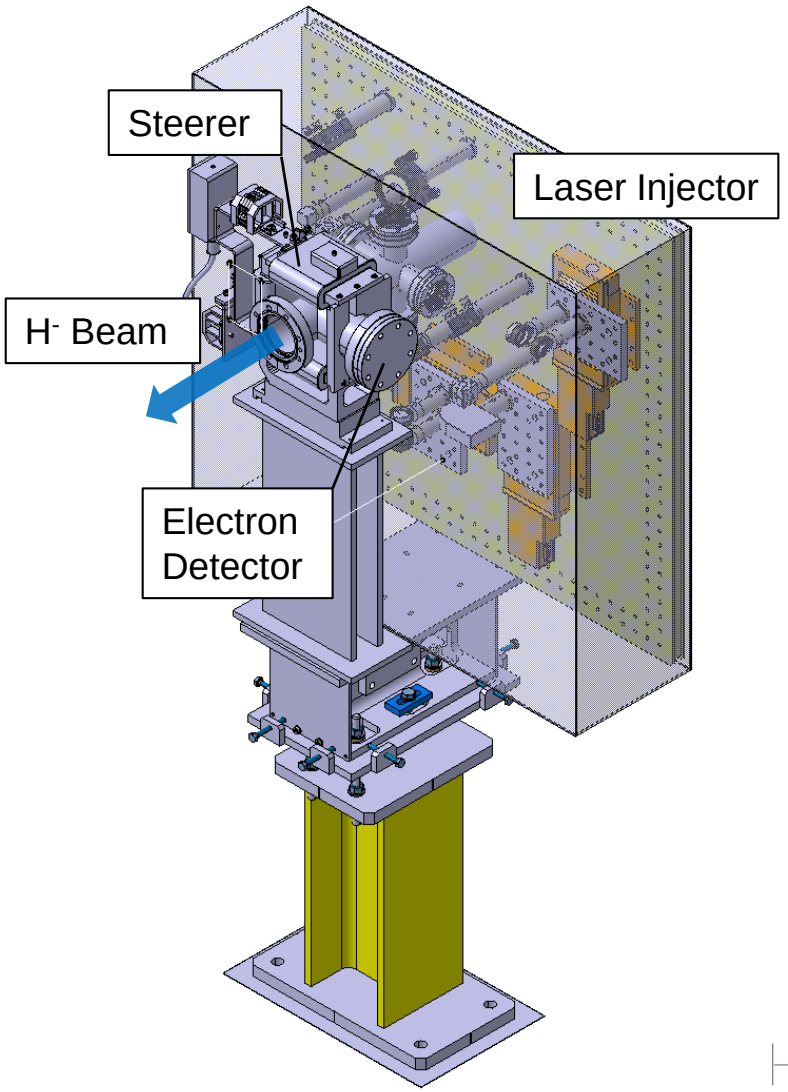

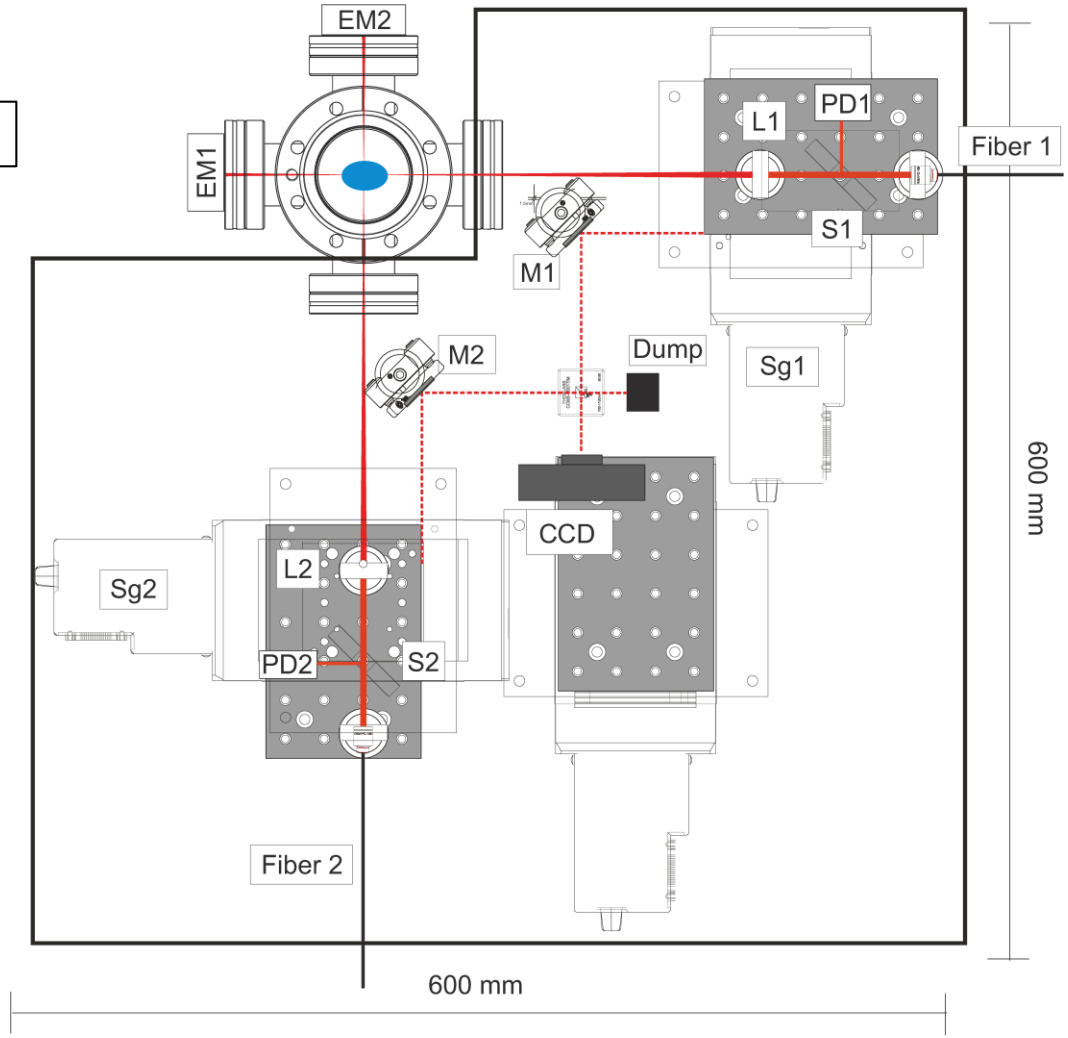

thomas.hofmann@cern.ch

H^0 Detector Station

- 2 pCVD diamond strip-detectors
  - 500 µm thickness
  - 2 sizes: 32 x 10 mm & 20 x 20 mm
  - Each with **28 strips** (350 µm pitch) → < 0.1 mrad resolution
- Horizontal & vertical detector one after another
  - Measurement of both planes at same time
- Detector mounted on actuator to move synchronous to laser scan (time for emittance scan: ~30s)

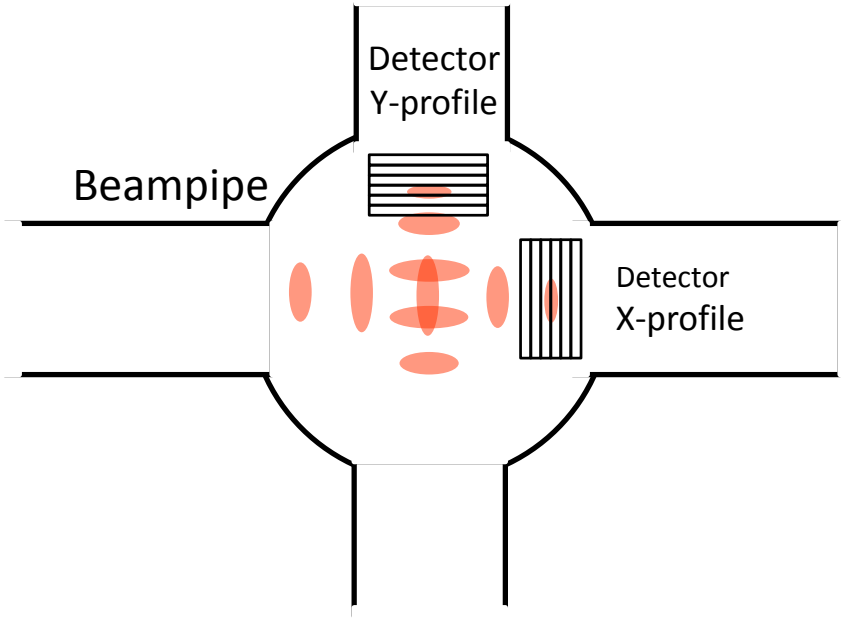

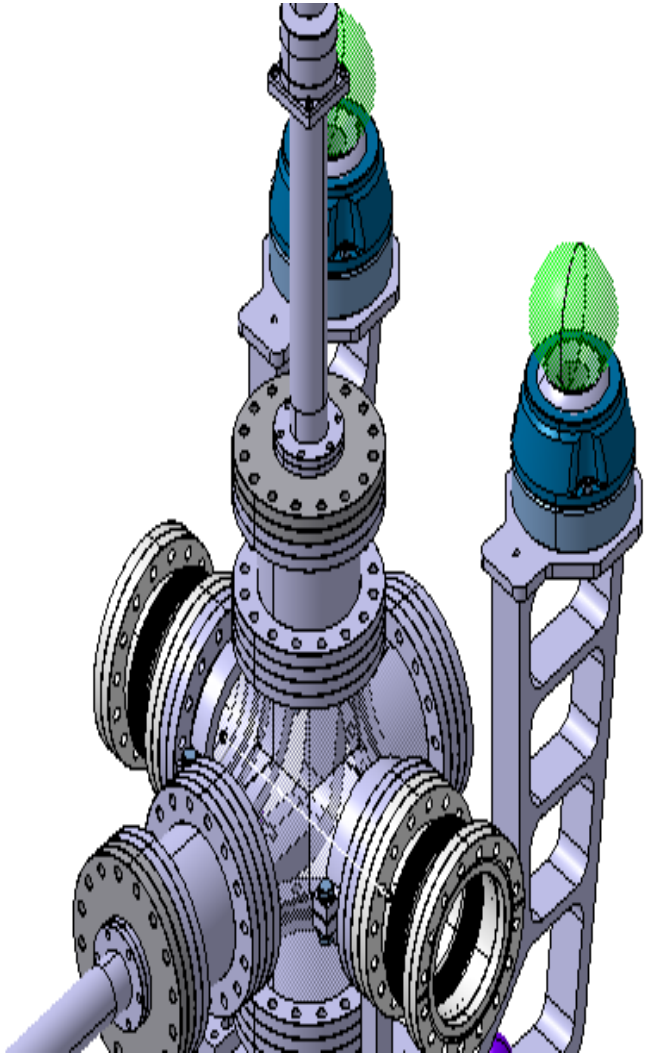

thomas.hofmann@cern.ch

Summary

What has been done?

- Prototype tests
  - Robust fiber-based laser delivery – no high power laser needed
  - H^0 Detection based on a diamond detector
  - Test of **Emittance** Monitor at 3 and 12 MeV H^- beam
  - Test of **Profile** Meter at 50/80/107 MeV beam (based on Electron Detection)
- **Design of permanent installation** for online emittance and profile monitoring at LINAC4's top energy

What offers laser based H^- beam diagnostics?

- Reliable Transverse Profile and Emittance Measurements
- Over a wide range of beam energies (MeV…GeV) and intensities (nA…A)
- Non-destructive measurement
  - Beam losses < 1ppm
- No moving parts in main beam→ No danger of broken wires or similar
  - Automized periodically online monitoring

thomas.hofmann@cern.ch

References

- T. Hofmann et al., *Proc. of IPAC2013, Shanghai, China*
- S. Gibson et al., *Proc. of IBIC2013, Oxford, UK*
- S. Gibson et al., *Proc. of IBIC2014, Monterey, CA, USA*
- T. Hofmann et al., *Proc. of IBIC2014, Monterey, CA, USA*
- R. Roncarolo et al., *Proc. of LINAC2014, Geneva, Switzerland*
- K. Kruchinin et al., *Proc. of IPAC2015, Richmond, VA, USA*
- T. Hofmann et al., *Proc. of IBIC2015, Melbourne, Australia*
- U. Raich et al., *Proc. of IPAC2016, Busan, Korea*
- S. Gibson et al., *Proc. of IBIC2016, Barcelona, Spain*
- T. Hofmann et al., *PRST-AB, 18, 122801 (2015)*
- T. Hofmann et al., *Nucl. Instrum. Methods A*, 830C, Pg. 526-531, (2016)

thomas.hofmann@cern.ch

Acknowledgements

- BI-group at CERN
- LINAC4 operations team
- FETS collaboration
- Francesca Zocca, Benjamin Cheymol
- Elena Barrios Diaz, Peter Savage & Richard Epsom
- Jeremie Bauche & Alexey Vorozhtsov
- Christoph Gabor
- UK STFC grant ST/N001753/1
- Marie Curie Networks LA3NET and oPAC, grant numbers 289191 and 289485.

thomas.hofmann@cern.ch

Thank you!