ENTRY NO. CU24 Date

Cyclotron Model CYPRIS 325

Institution CERMEP

Address 59 Bd Pinel, 69003 LYON (France)

Tel 33/72.33.00.07 Telex

Fax 33/78.53.31.12 EMAIL

In Charge: D. LE BARS Reported by: D. LE BARS

HISTORY

MILESTONE DATES:

Installation Sept-Dec 1987 First Beam Jan 1988

DESIGN/CONSTRUCTION BY: CGR Mev

COST: Accelerator 15 MF Facility 60 MF

FUNDED BY: INSERM/CNRS/HOSPITAL/UNIVERSITIES

STATUS

STAFF: Operators 1 Technicians

BUDGET: Machine 500.000 F Funded by CERMEP

TIME DISTRIBUTION: (e.g. basic research, isotope production, maintenance, etc.)

(a) Isotope production 95 %

(b) Maintenance 5 %

(c) %

(d) %

(e) %

CHARACTERISTIC BEAMS

Accelerated Ions	E/A (MeV/u)	Current(part μA) Internal	External
(a) H^+	16 Mev		50 μA
(b) D^+	8 Mev		50 μA

1991 μA-hours on target: ~ 2 000

FACILITIES

SHIELDED AREA: Fixed 30 m² Moveable m²

Target Stations: No. Served At Same Time:

OTHER FACILITIES: 4 hot cells

Automated chemistry (Developped on-site)

REFERENCES/NOTES

(a)

(b)

PLAN VIEW OF FACILITY, COMMENTS

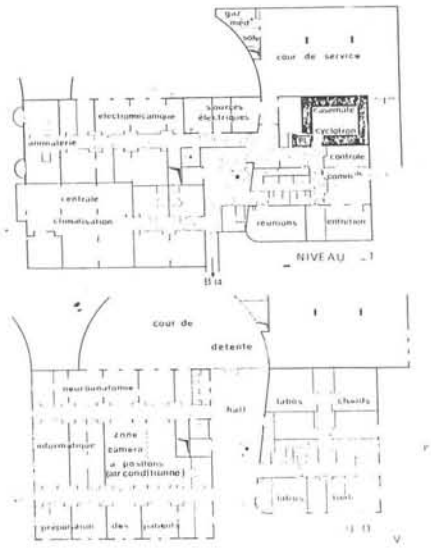

ENTRY NO. CU25 Date

Cyclotron Model CV 28

Institution Physikalisch-Technische Bundesanstalt

Address Bundesallee 100, W-3300 Braunschweig, FRG

Tel 0531-592.7121 Telex 952822 ptb d

Fax 0531-592 4006 EMAIL

In Charge: R. Böttger Reported by: R. Böttger

HISTORY

MILESTONE DATES:

Installation 1972-1973 First Beam 1973

DESIGN/CONSTRUCTION BY: The Cyclotron Corporation

COST: Accelerator $3 \cdot 10^6$ DM Facility $25 \cdot 10^6$ DM

FUNDED BY: Federal Republic of Germany

STATUS

STAFF: Operators 4 Technicians 2

BUDGET: Machine $2 \cdot 10^5$ DM Funded by FRG

TIME DISTRIBUTION: (e.g. basic research, isotope production, maintenance, etc.)

(a) Nuclear data (neutron physics) 30 %

(b) Calibration (n+γ) 30 %

(c) Dosimetry 40 %

(d) %

(e) %

CHARACTERISTIC BEAMS

Accelerated Ions	E/A (MeV/u)	Current(part μA) Internal	External
(a) p	max. 24	> 350	70-100
(b) d	max. 7	> 300	100

1991 μA-hours on target: 2000

FACILITIES

SHIELDED AREA: Fixed 850 m² Moveable - m²

Target Stations: 5 No. Served At Same Time: 2

OTHER FACILITIES: Time of flight facility for fast neutrons; standard neutron field for therapy and radiobiology

REFERENCES/NOTES

(a) Nucl. Instrum. Meth., 169 (1980) 349 - 358

(b) Nucl. Instrum. Meth., 193 (1982) 635 - 644

PLAN VIEW OF FACILITY, COMMENTS
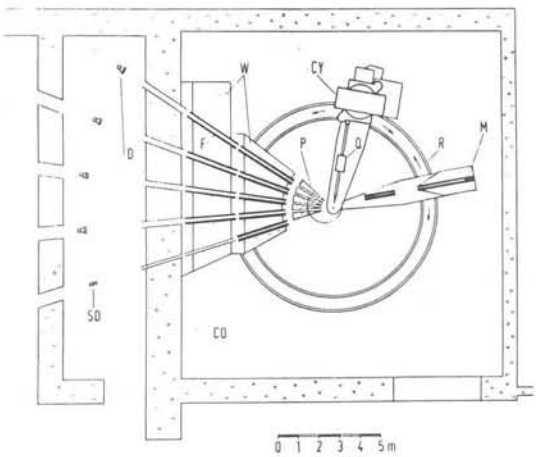
Movable cyclotron arrangement with ns-pulsing system especially designed for neutron scattering experiments.