Commissioning of National Synchrotron Light Source-II (NSLS-II) Fast Orbit Feedback System

15th ICALEPCS 2015, Melbourne, Australia

K. Ha, Y. Tian, L. Yu, W. Cheng, L. Dalesio

W. Levine, University of Maryland, College Park, MD, USA

October 17-23, 2015

U.S. DEPARTMENT OF ENERGY

BROOKHAVEN NATIONAL LABORATORY

BROOKHAVEN SCIENCE ASSOCIATES

Outline

- NSLS-II status and parameters overview
- NSLS-II orbit feedback system
  - Technical requirements and specifications
  - Hardware review
- Individual eigenmode compensation
  - NSLS-II FOFB algorithm with individual eigenmode compensation
- Implementation
  - FPGA
  - Latency
- Performance measurement
- Summary

NSLS-II Key performance

- ***Beamline operation started Feb. 2015 with 150 mA***
- ***Oct started 250 mA top-off operation***
  - 3 GeV, 500 mA beam current with 1 nm-rad horizontal and 8 pm-rad vertical emittance.
    - Beam sizes at source points are ~100 µm / 3 µm (x/y)
  - High beam stability in position (<10% of rms size) and angle (<10% of rms divergence)
  - 1080 bunches in 1320 RF buckets, 3 hrs lifetime
  - Top off injection for stable intensity (±0.5% variation)

Design Parameters	Value
Beam Energy [GeV]	3
Beam Current [mA]	500
Circumference [m]	792
Number of DBA cells	30
X/Y Emittance [nm-rad]	1/0.008
Relative energy Spread	0.1%
RF Voltage [MV]	4.9
Number of ID straights	15 SSS and 12 LSS

One super-period SR Lattice function

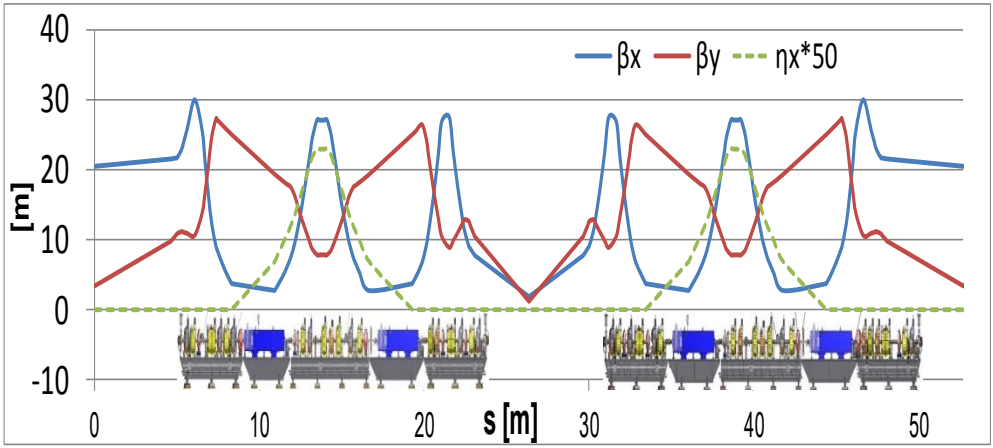

Long ID =9.3m Short ID= 6.6m

SR BPMs and Correctors Location

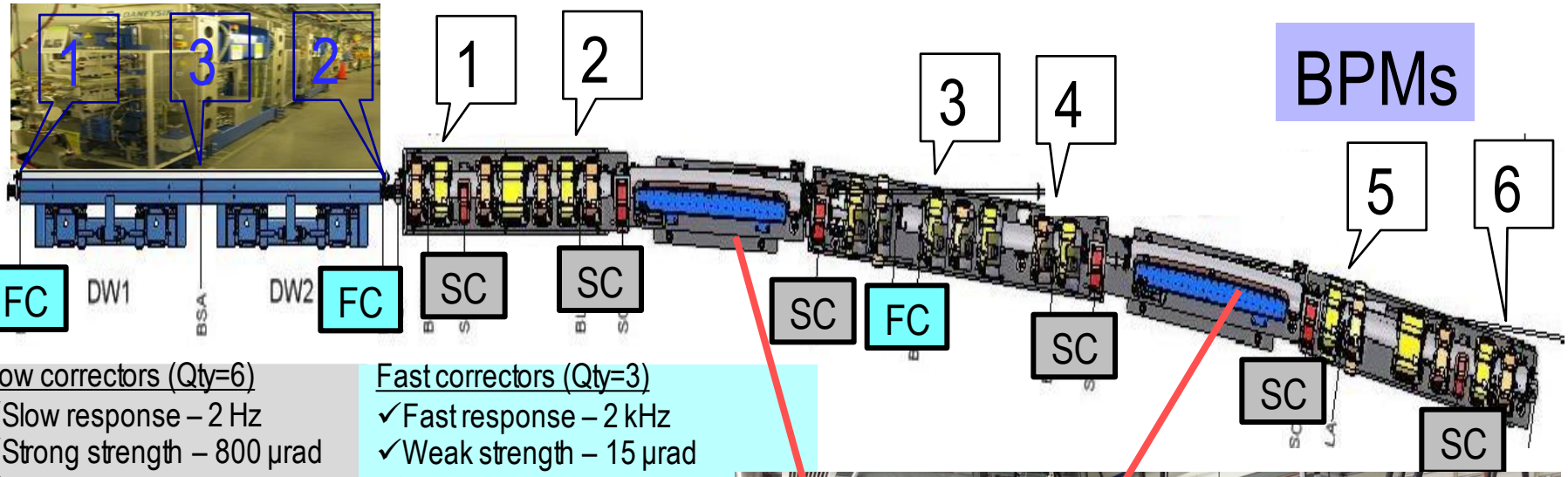

Slow correctors (Qty=6)
- ✓Slow response – 2 Hz
- ✓Strong strength – 800 µrad
- ✓Utilized for – Alignment Slow orbit feedback

Fast correctors (Qty=3)
- ✓Fast response – 2 kHz
- ✓Weak strength – 15 µrad
- ✓Utilized for – Fast orbit feedl

100 mm slow(8)
156 mm slow(4)

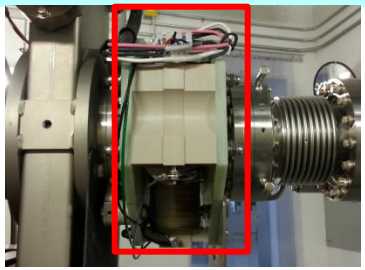

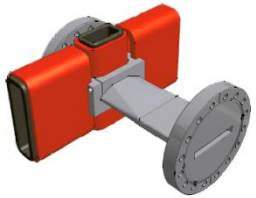

30 mm fast (air core)

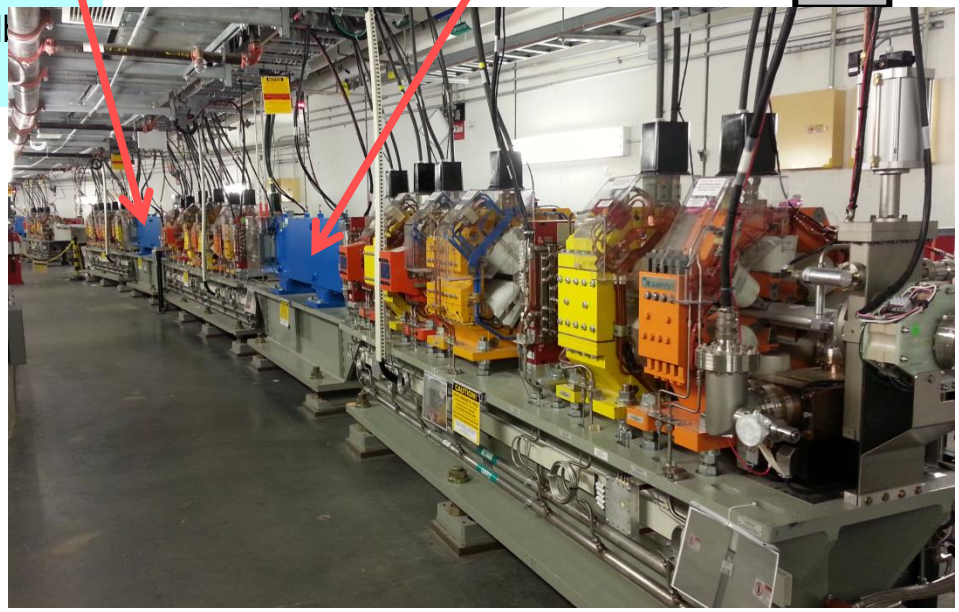

System Specifications

- Number of CCs : 30 sets
- Minimize beam motion < 10 %
- Feedback rate : 10 kHz
- Bandwidth : ~ 200 Hz
- Control algorithm : SVD, Individual Eigenmode with PID control
  FPGA based parallel matrix calculation
- Number of BPMs : 180 ea + ID bpms (27)
  NSLS-II in house designed high performance rf BPM
- Number of a fast correctors : 90 ea
  15 urad, 20 bit current output resolution, 1 ppm step response, 2 kHz small signal bandwidth

- Virtex-6 FPGA based hardware digital processor
  - Local cell installed own feedback processor which called Cell Controller unit
- Communication update rate is 10 kHz
  5 Gbps fiber optics communication for BPM and CC, 100 Mbps copper for PS
- All System's (CC/BPM/AI/PS) synchronized with accelerator timing system

Diagnostics/PS Rack and Cell Controller Chassis

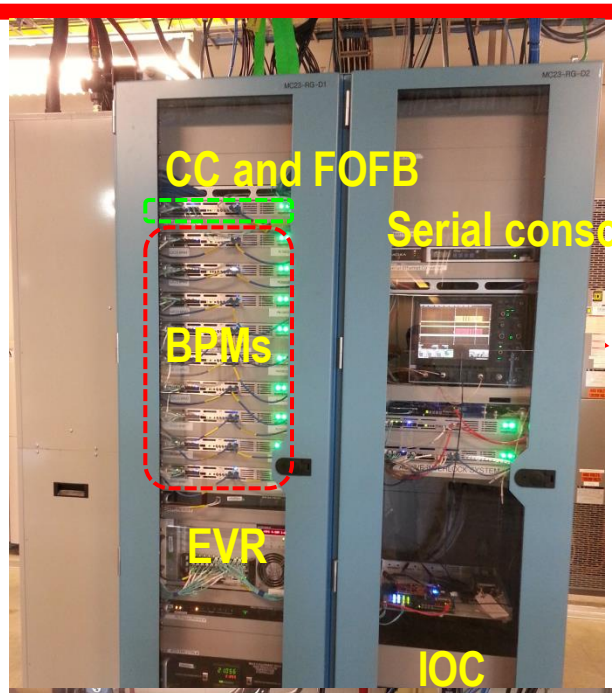

IO signals (16 inputs, 12 ouptuts, 4 Vout) for fast machine protection

100 Mbit/s link for corrector setpoints

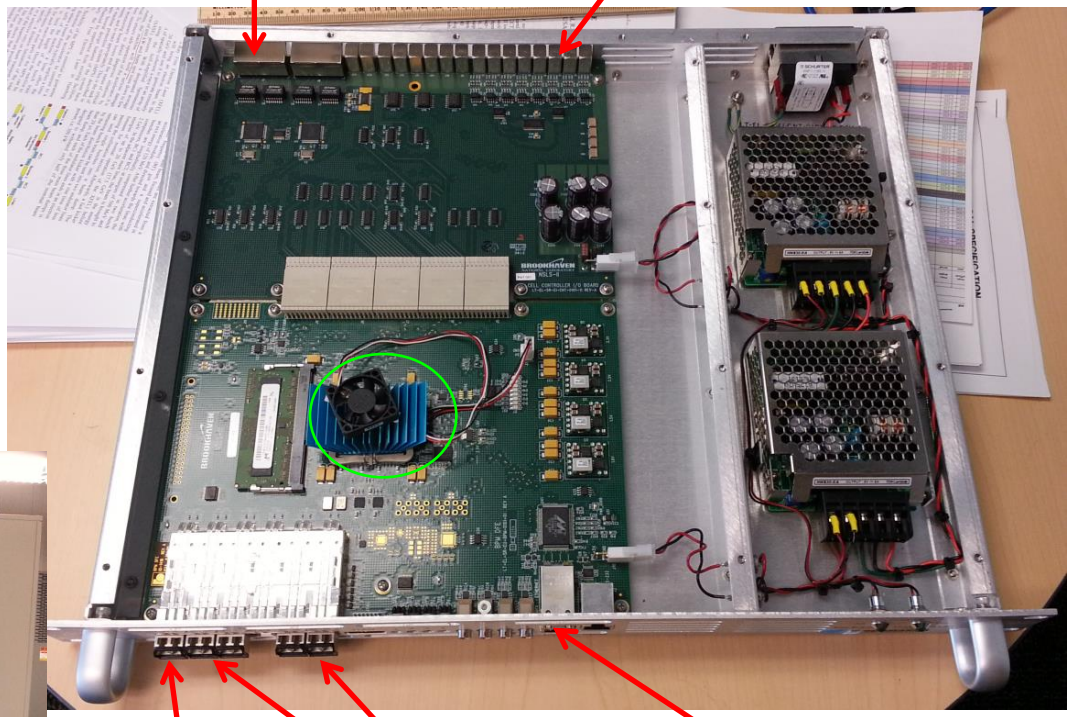

Embedded Event Received

Gigabit Ethernet to EPICS IOC

5 Gigabit/s SDI link for BPM and CC data

+/-0.1 degC temperature controller

RF BPM Chassis

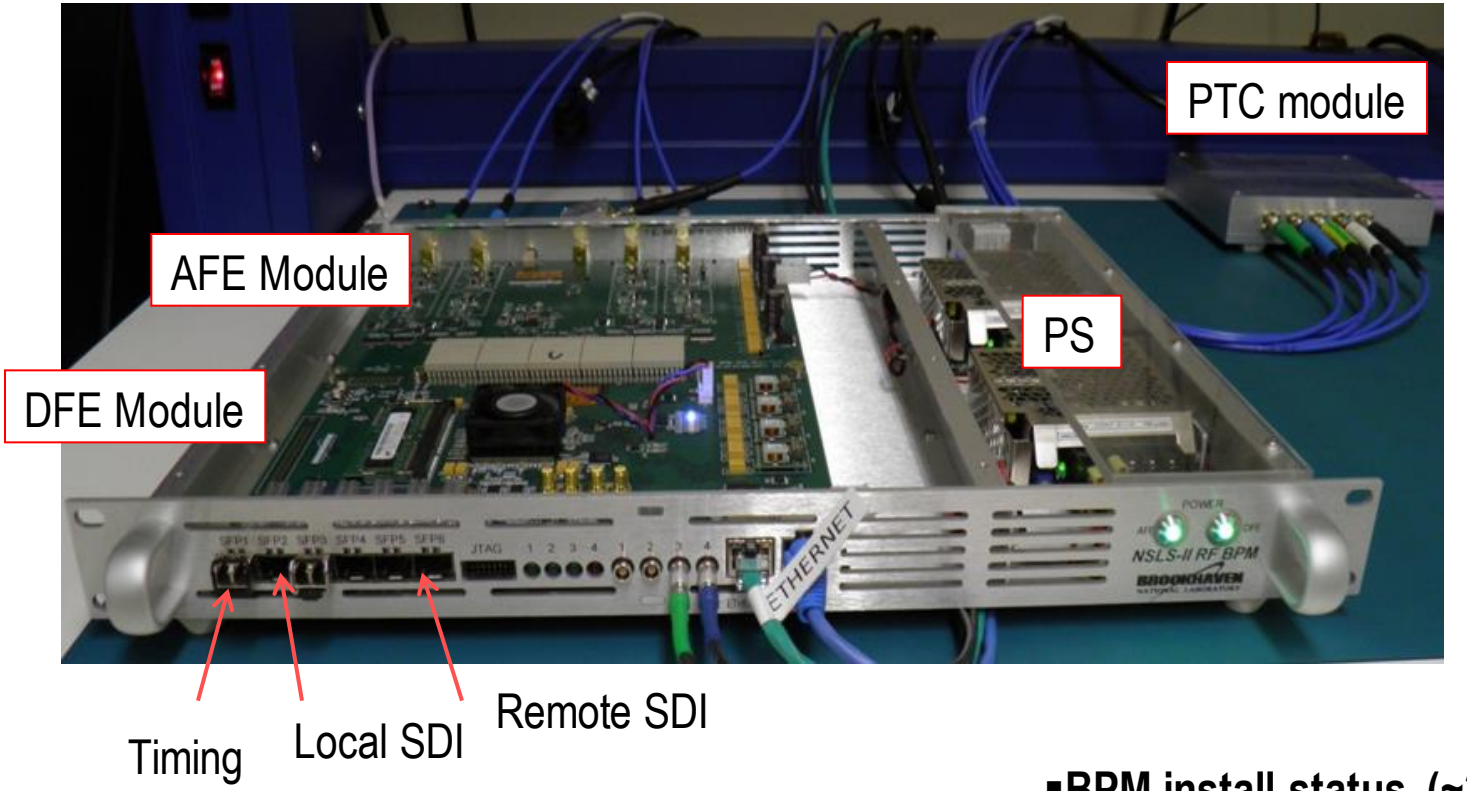

- 60% fill pattern, beam current was limited to an administrative limit of 25 mA, which corresponds to almost full ADC scale.
  - **TBT (378 KHz) Resolution at 15 mA ~ 700 nm**
  - **FA (10 KHz) Resolution at 15 mA ~ 200 nm**

- **BPM install status (~270)**
  - **Linac – 6**
  - **LTB – 5**
  - **BR - 36**
  - **BTS - 9**
  - **SR – 211, arc (180), ID (27), Injection(4)**

RF BPM Chassis

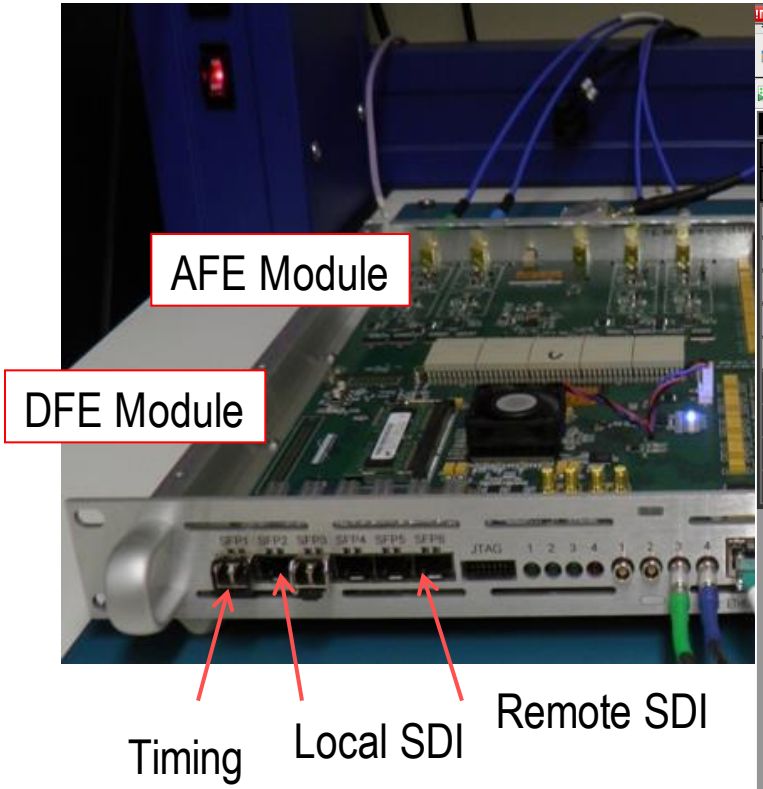

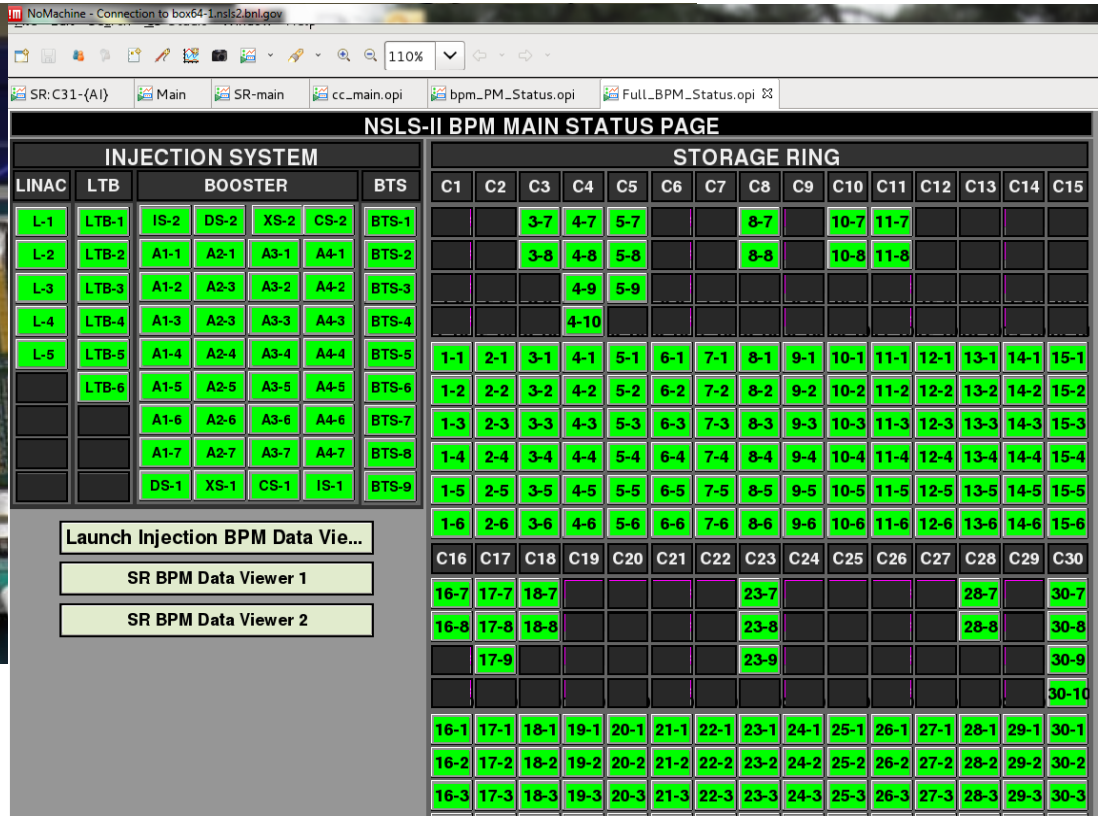

- 60% fill pattern, beam current was limited to an administrative limit of 25 mA, which corresponds to almost full ADC scale.
  - **TBT (378 KHz) Resolution at 15 mA ~ 700 nm**
  - **FA (10 KHz) Resolution at 15 mA ~ 200 nm**

- **Linac – 6**
- **LTB – 5**
- **BR - 36**
- **BTS - 9**
- **SR – 211, arc (180), ID (27), Injection(4)**

Topology of the FOFB dedicated network

NSLS-II Serial Device Interface(SDI)

- ✓ Ring topology method
- ✓ BPM and CC 5 Gbps, bidirectional (CW, CCW direction)
- ✓ Global 31 nodes
- ✓ bpm local nodes (6-13)
- ✓ PS 12 nodes (100 Mbps Ethernet PHY)
- ✓ Every 10 kHz transfer packets to neighbor cell
- ✓ Global packet size is 780 x 4byte (3120 bytes)
- ✓ Local packet size is 26 x 4byte (104 bytes)

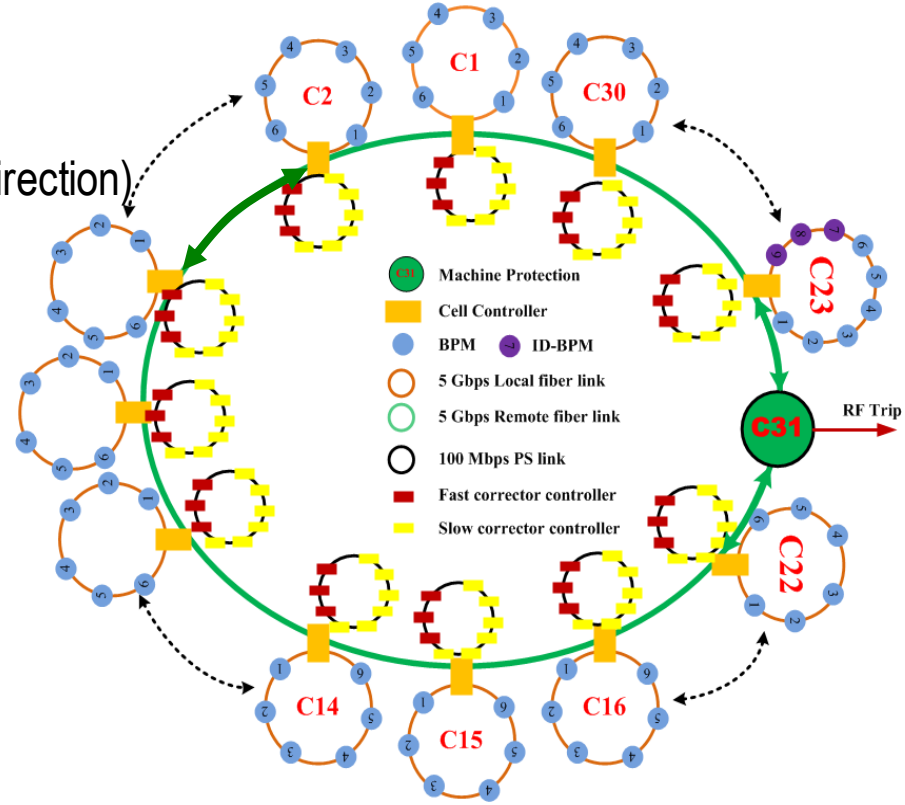

- ❑ **Lab test configuration before installation (2013.9)**
- ✓ Tested total 32 nodes
- ✓ Confirmed :
  - ✓ Timing, communication protocol, IOC..,
  - ✓ Firmware functionalities

Topology of the FOFB dedicated network

NSLS-II Serial Device Interface(SDI)

- ✓ Ring topology method
- ✓ BPM and CC 5 Gbps, bidirectional (CW, CCW direction)
- ✓ Global 31 nodes
- ✓ bpm local nodes (6-13)
- ✓ PS 12 nodes (100 Mbps Ethernet PHY)
- ✓ Every 10 kHz transfer packets to neighbor cell
- ✓ Global packet size is 780 x 4byte (3120 bytes)
- ✓ Local packet size is 26 x 4byte (104 bytes)

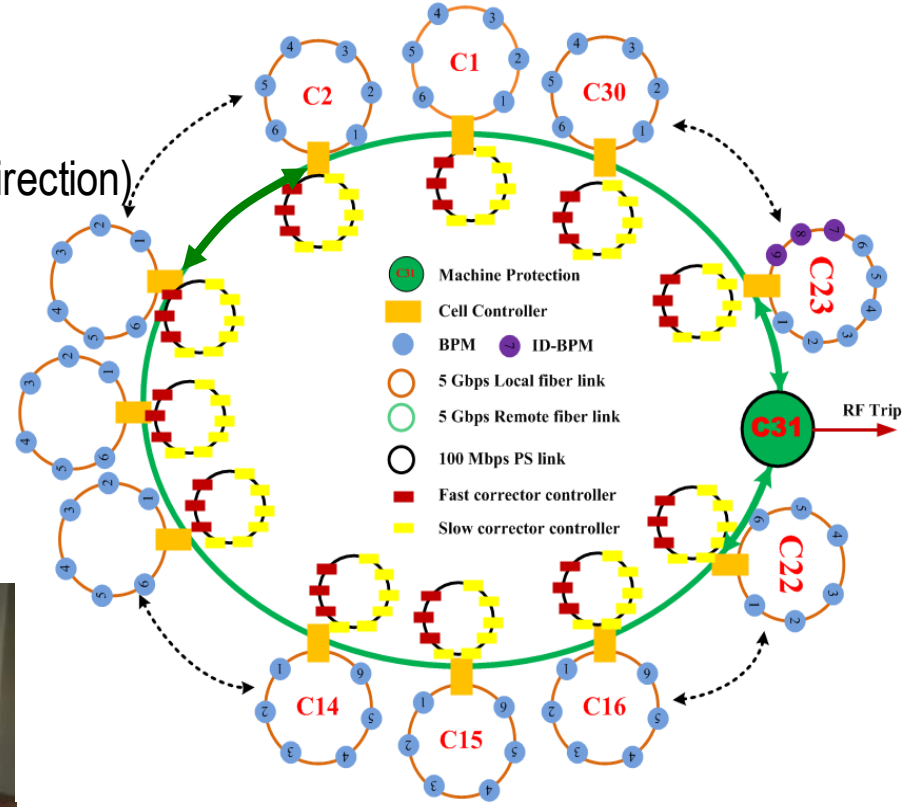

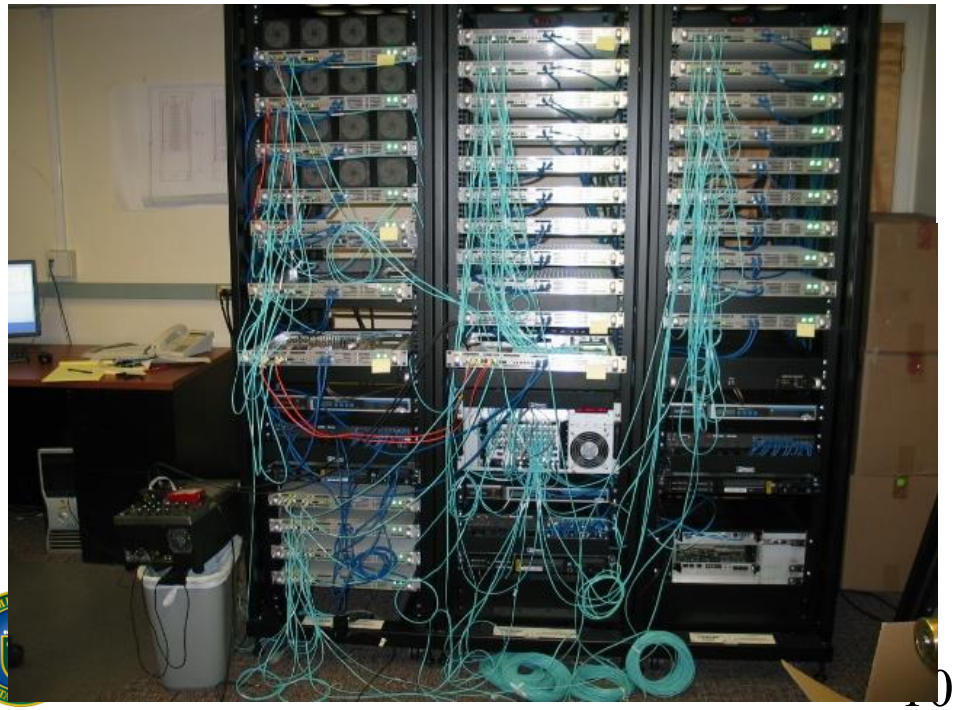

- ❑ **Lab test configuration before installation (2013.9)**
- ✓ Tested total 32 nodes
- ✓ Confirmed :
  - ✓ Timing, communication protocol, IOC..,
  - ✓ Firmware functionalities

FOFB Calculation - Compensation for each eigenmode

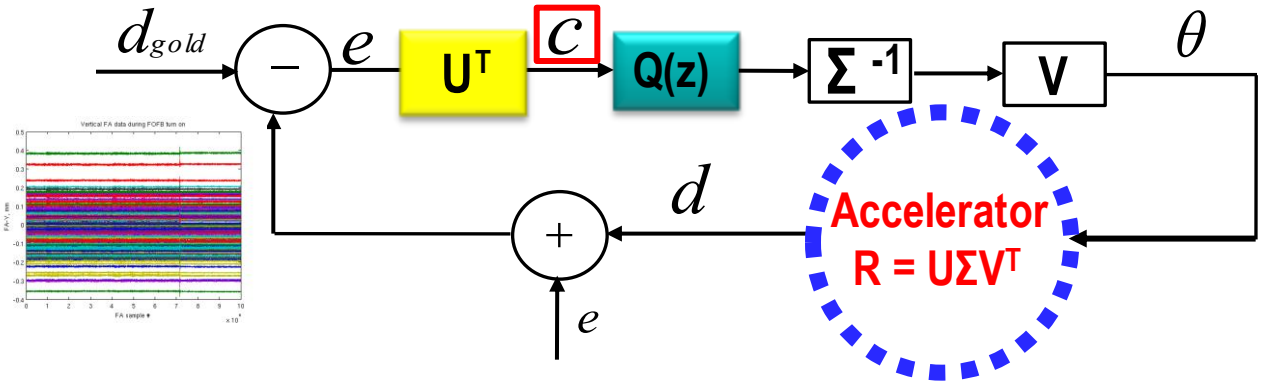

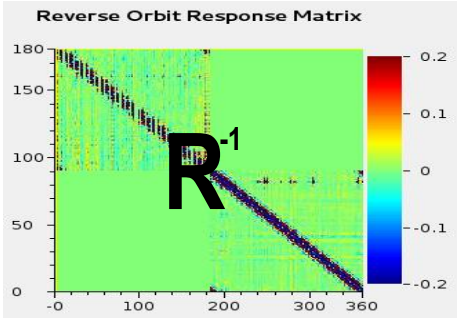

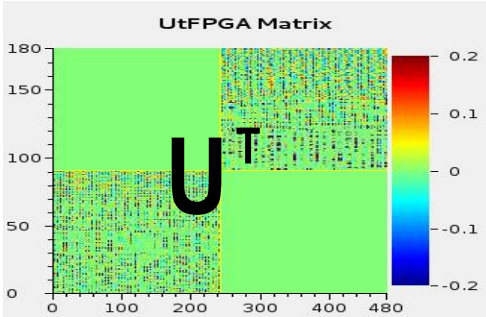

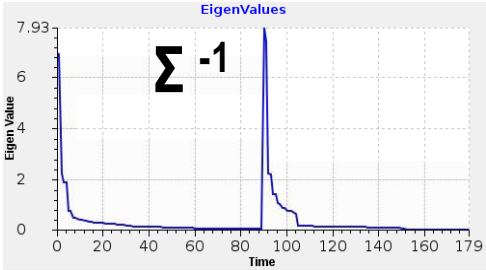

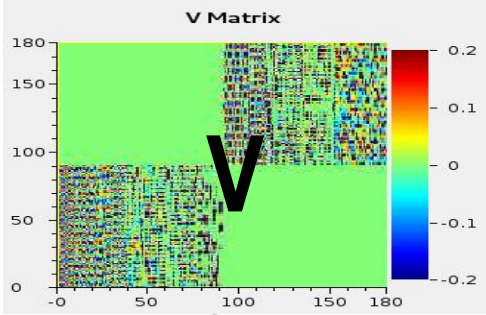

FOFB Calculation - Compensation for each eigenmode

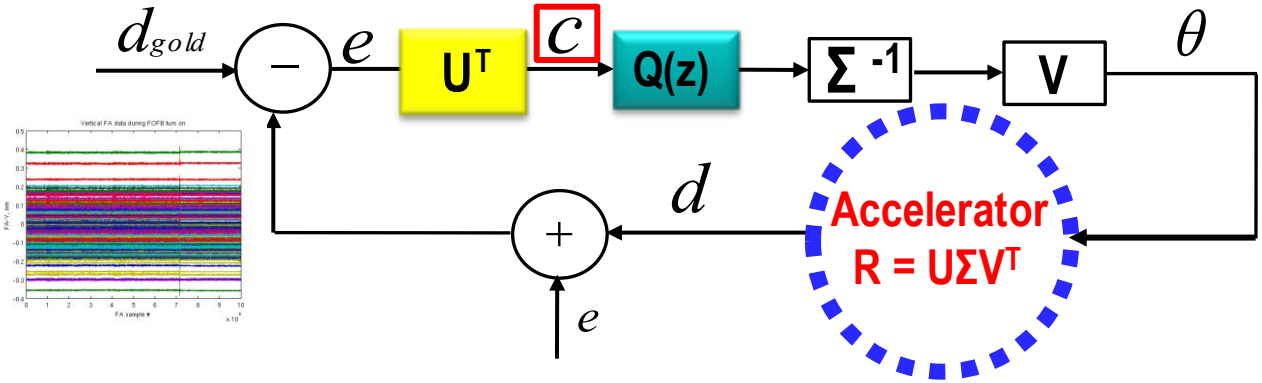

$$Q(z) = \begin{bmatrix} Q_1(z) & 0 & 0 & 0 \\ 0 & Q_2(z) & 0 & 0 \\ . & . & . & . \\ 0 & 0 & 0 & Q_N(z) \end{bmatrix}$$

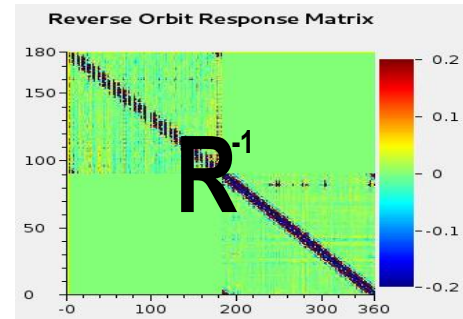

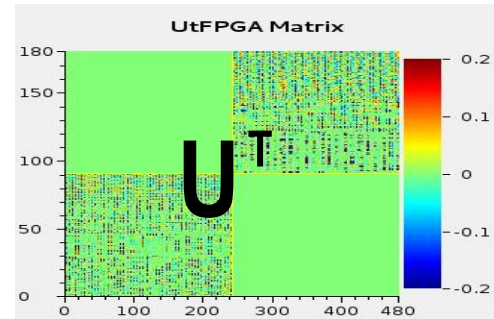

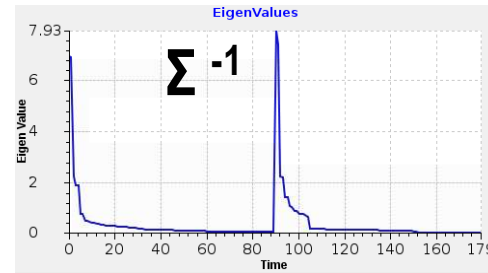

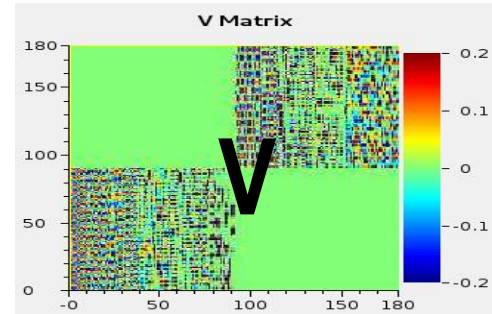

$c_1, c_2, \ldots, c_N$ is the input projections in the eigenspace.

$Q_1(z), Q_2(z), \ldots, Q_N(z)$ is the compensator for each eigenmode.

We want to prove that $Q_1(z),\ldots, Q_N(z)$ only change the corresponding eigenmode in eigenspace without affecting other eigenmodes.

FOFB Calculation - Compensation for each eigenmode

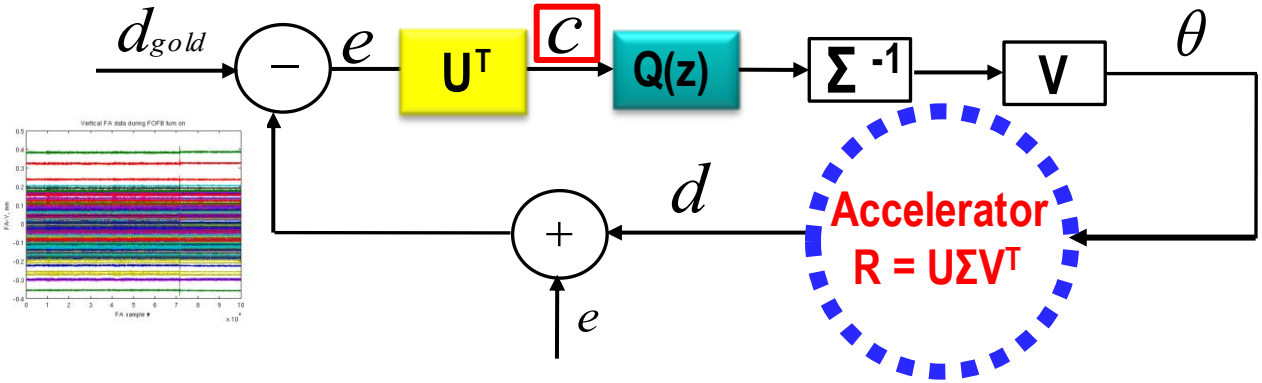

$$Q(z) = \begin{bmatrix} Q_1(z) & 0 & 0 & 0 \\ 0 & Q_2(z) & 0 & 0 \\ . & . & . & . \\ 0 & 0 & 0 & Q_N(z) \end{bmatrix}$$

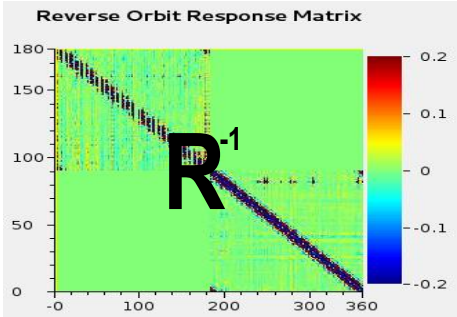

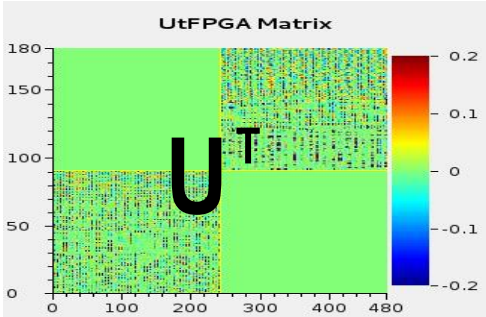

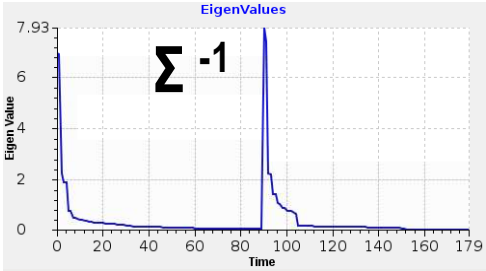

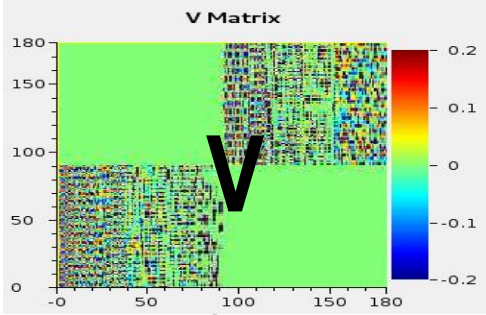

$c_1, c_2, \ldots, c_N$ is the input projections in the eigenspace.

$Q_1(z), Q_2(z), \ldots, Q_N(z)$ is the compensator for each eigenmode.

We want to prove that $Q_1(z),\ldots, Q_N(z)$ only change the corresponding eigenmode in eigenspace without affecting other eigenmodes.

Cell Controller FPGA internal blocks

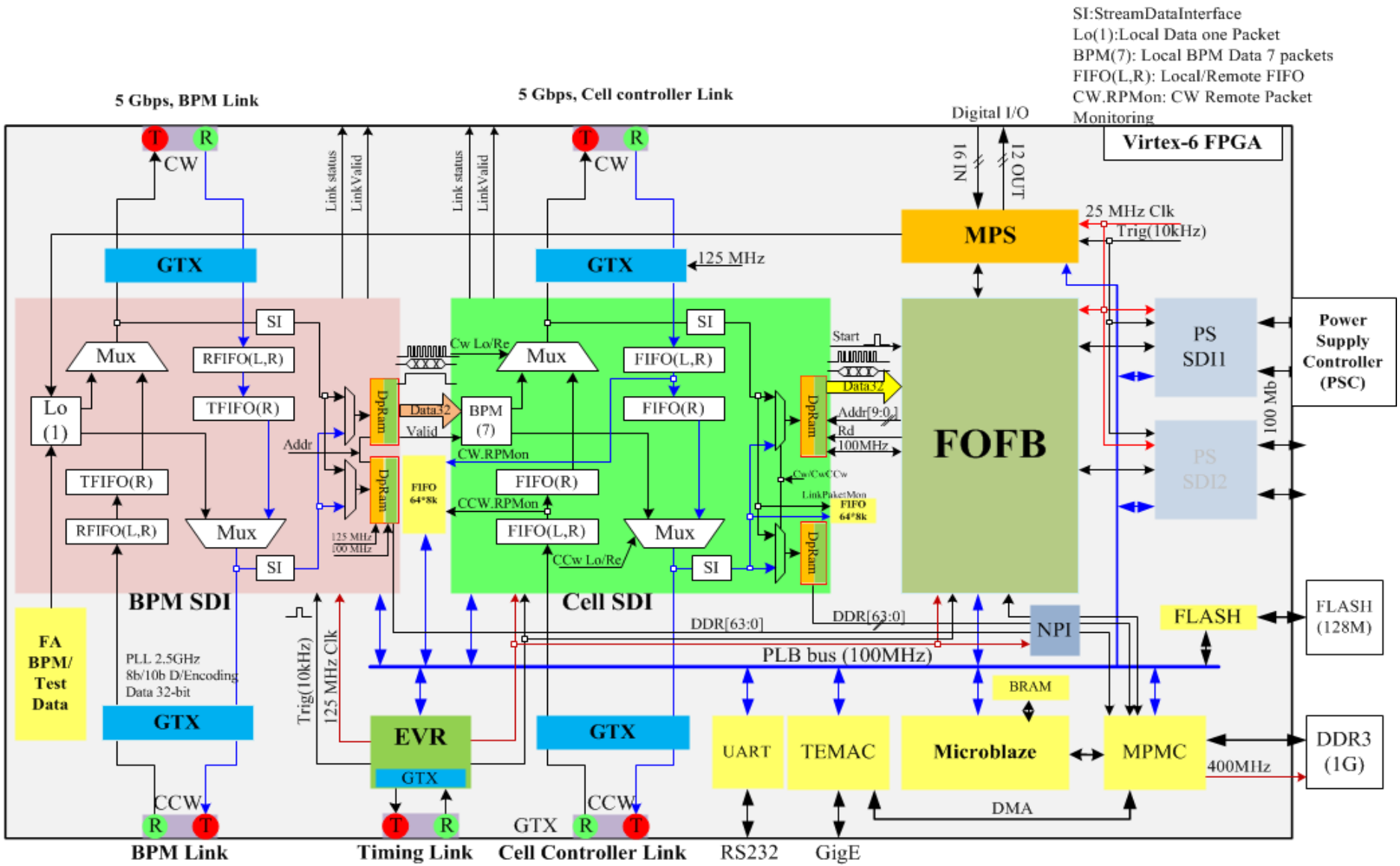

Block diagram of the feedback calculation

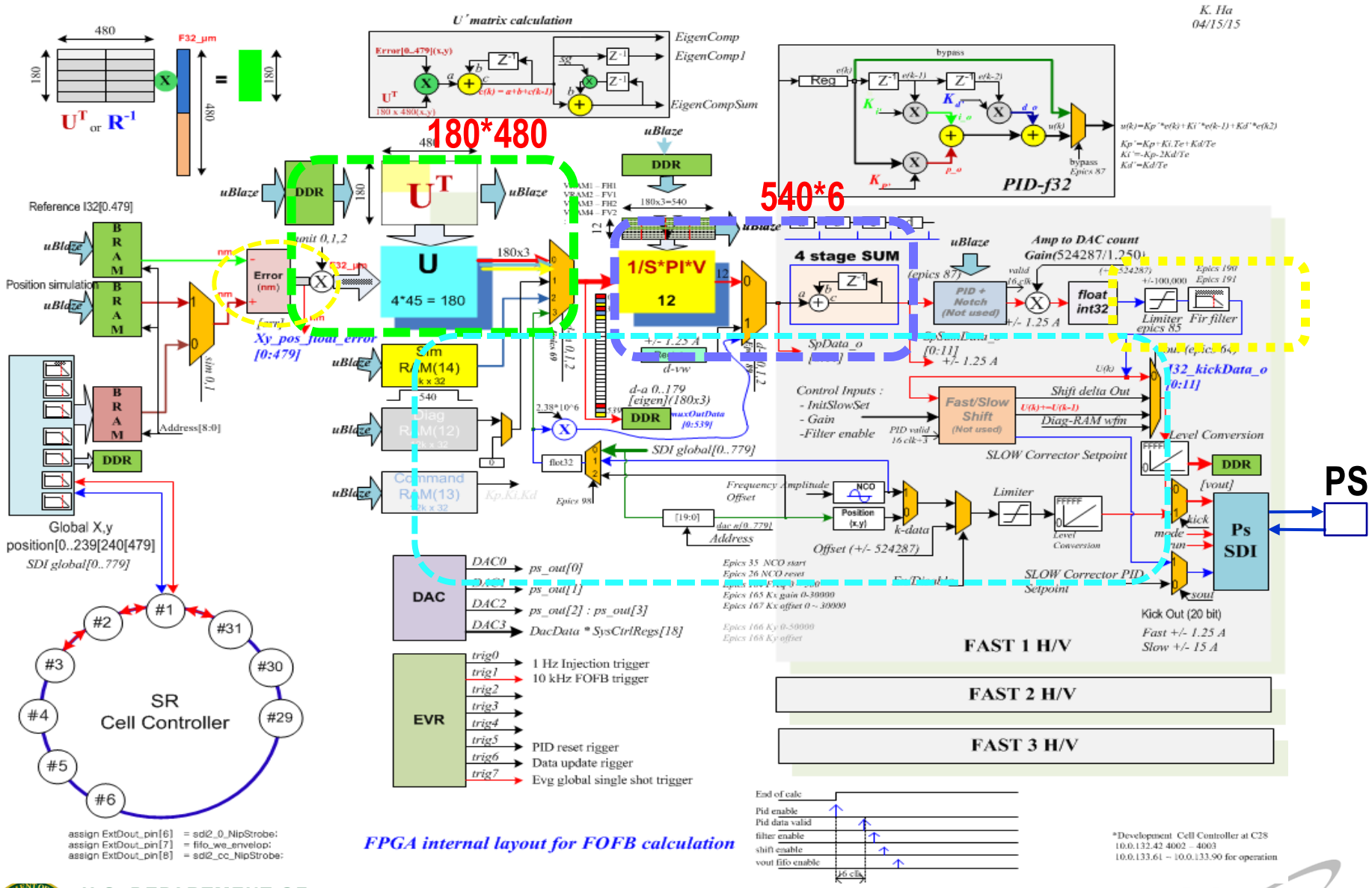

Block diagram of the feedback calculation

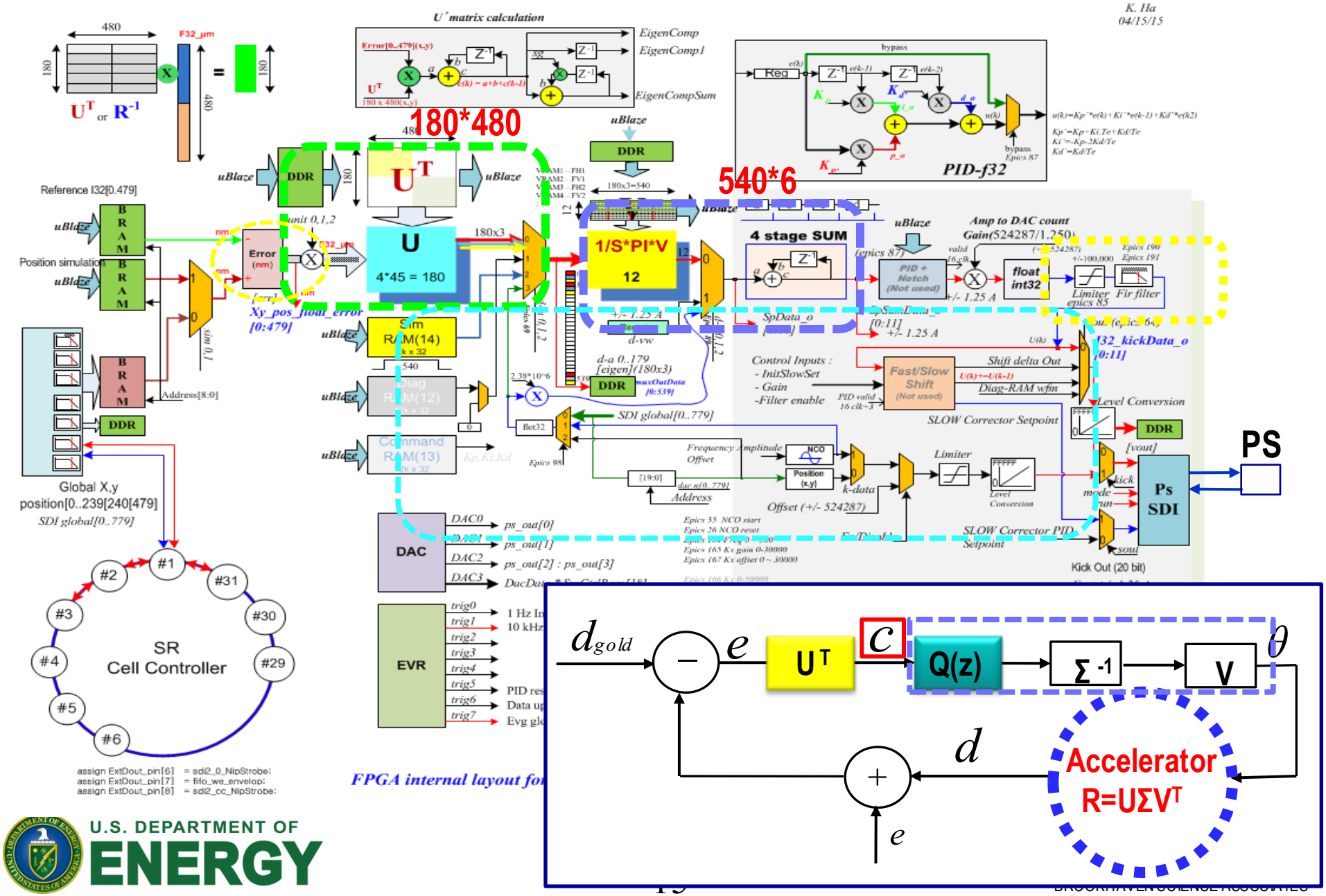

Overall timing estimation

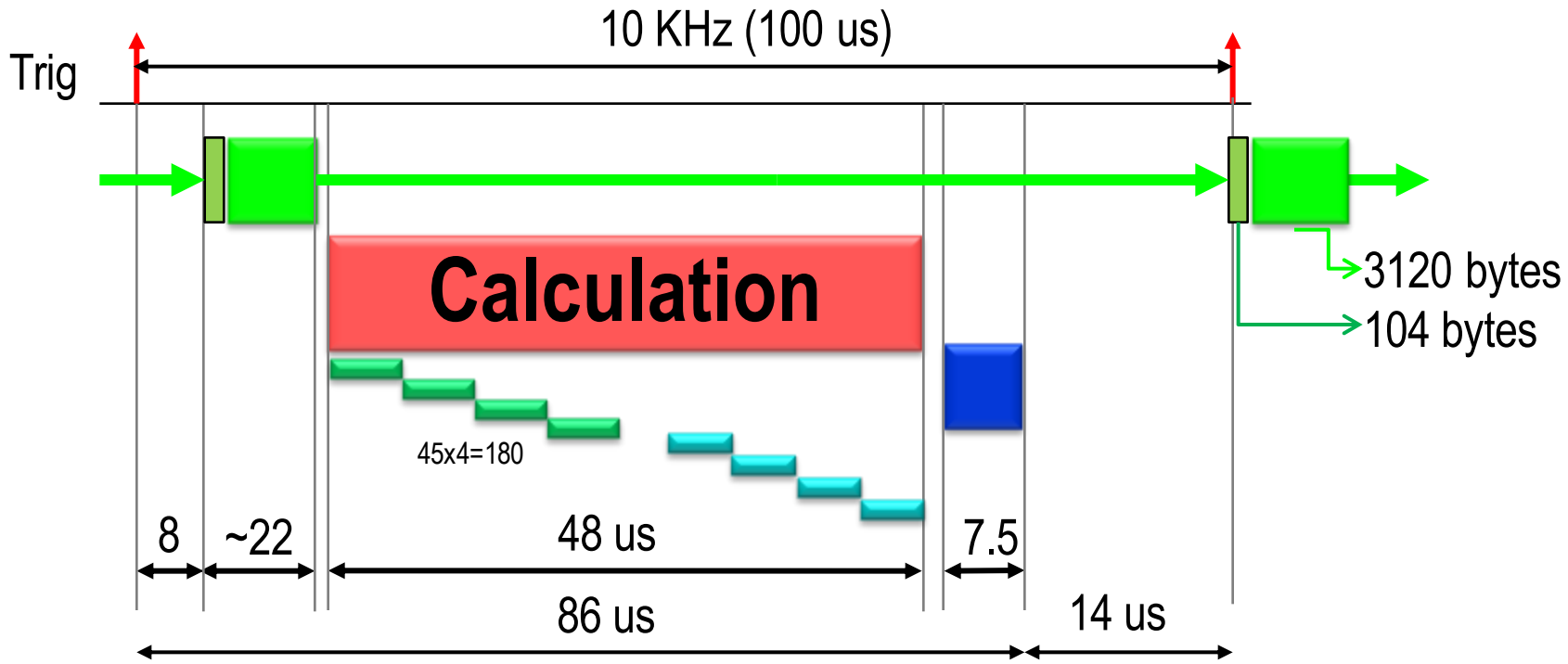

- Local BPM data (2.2 us, 104 byte, 5 Gbps, @ 125 MHz)
- Global BPM data transfer link (20 us. 3120 byte, 5 Gbps, @ 125 MHz)
- Calculation (48 us @ 50 MHz, 180* 480 and 540 * 6 matrix calculation)
- Corrector setting (7 us, 100 Mbps @ 25 MHz)

BPM/CC/PSI Hardware Latency measurement

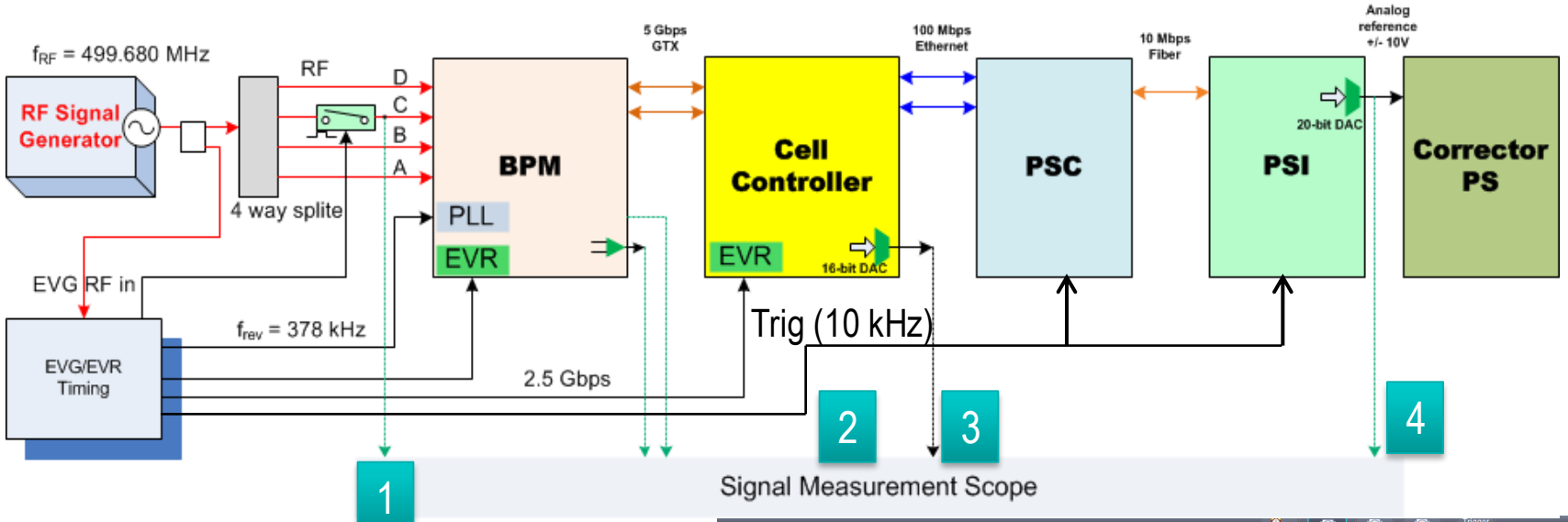

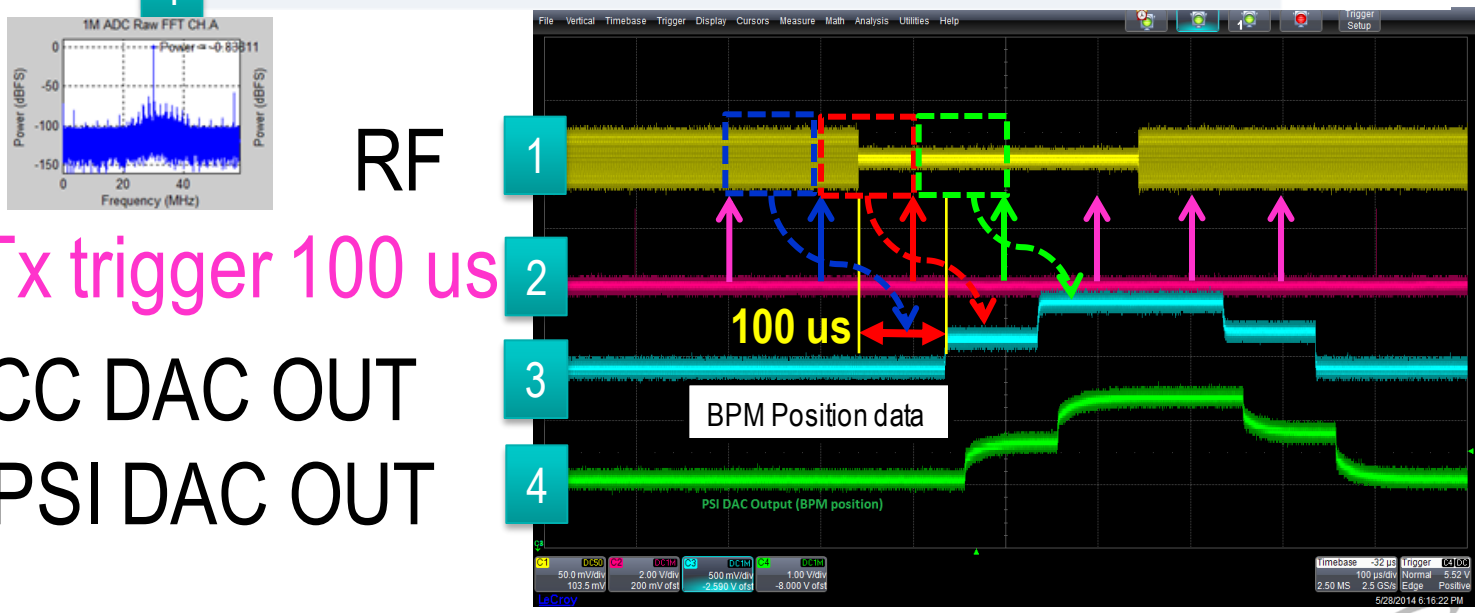

BPM/CC/PSI Hardware Latency measurement

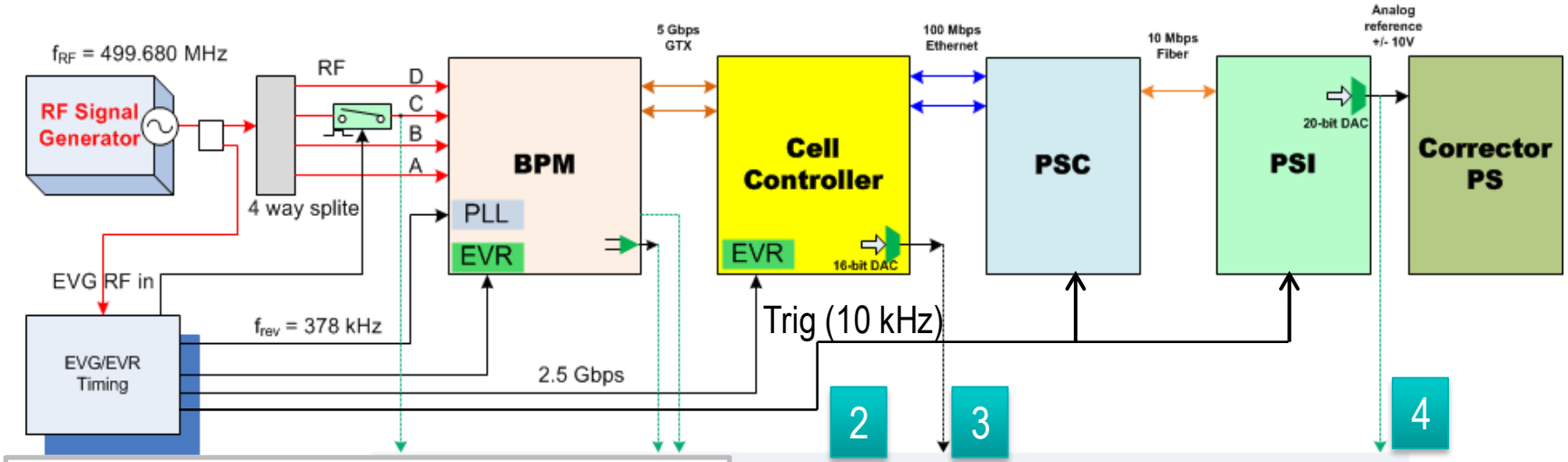

System Transfer function measurement (PS -> corrector M -> chamber -> bpm button) H : 1 kHz, V : 800 Hz

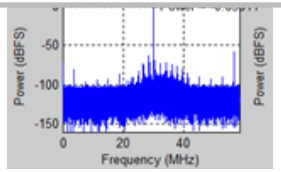

Signal Measurement Scope

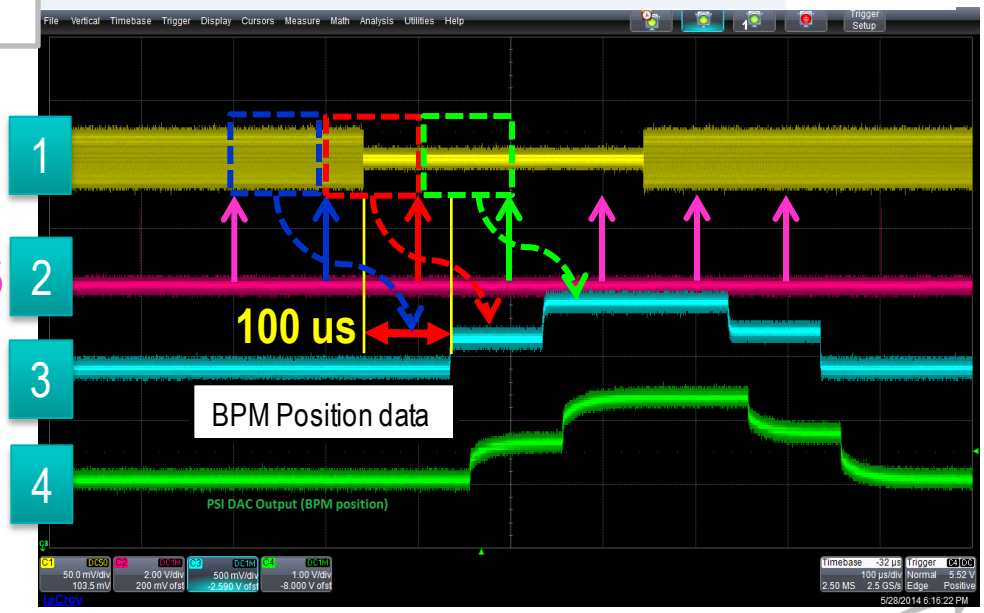

RF

Tx trigger 100 us

CC DAC OUT

PSI DAC OUT

BPM/CC/PSI Hardware Latency measurement

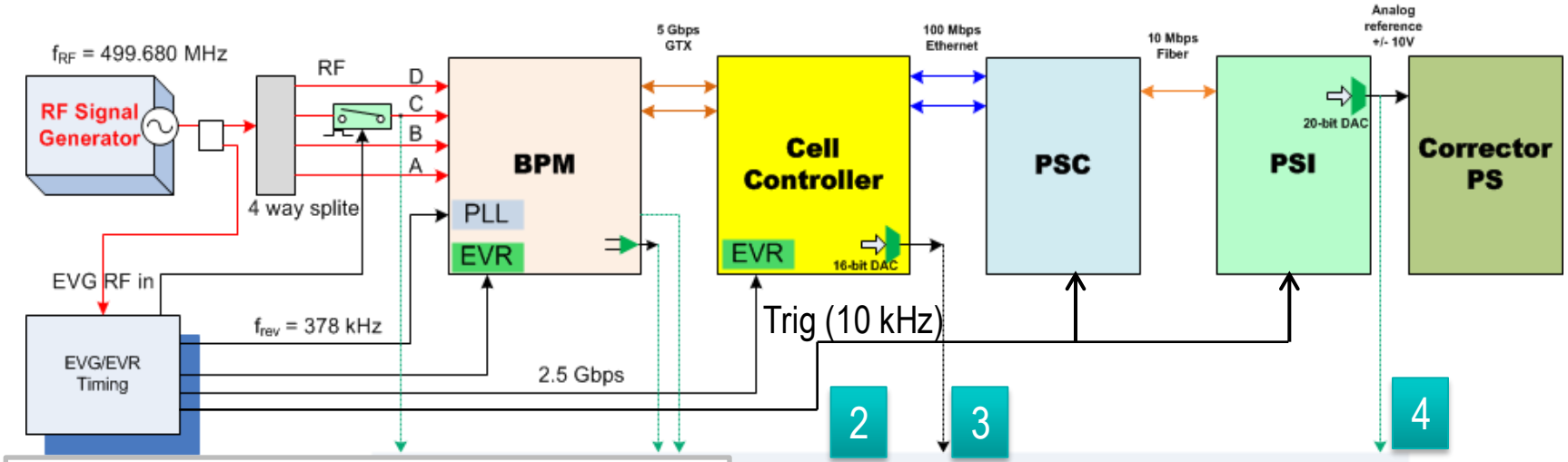

System Transfer function measurement (PS -> corrector M -> chamber -> bpm button) H : 1 kHz, V : 800 Hz

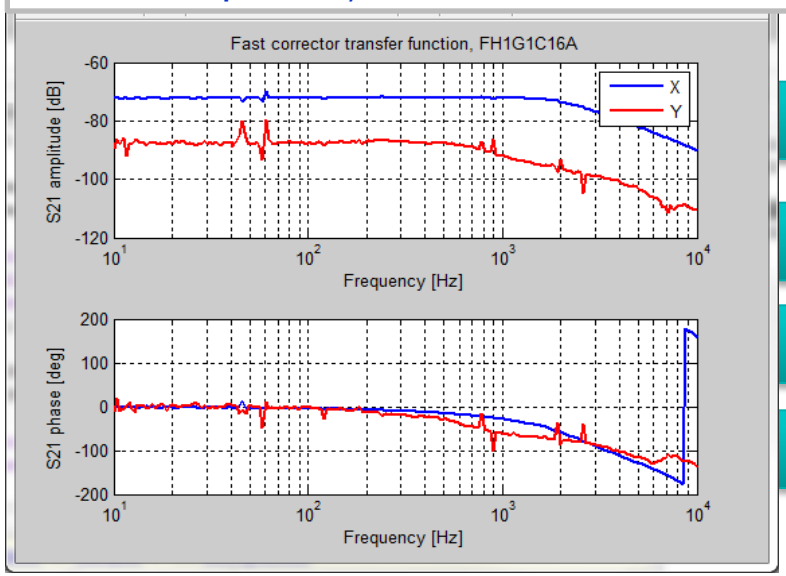

Signal Measurement Scope

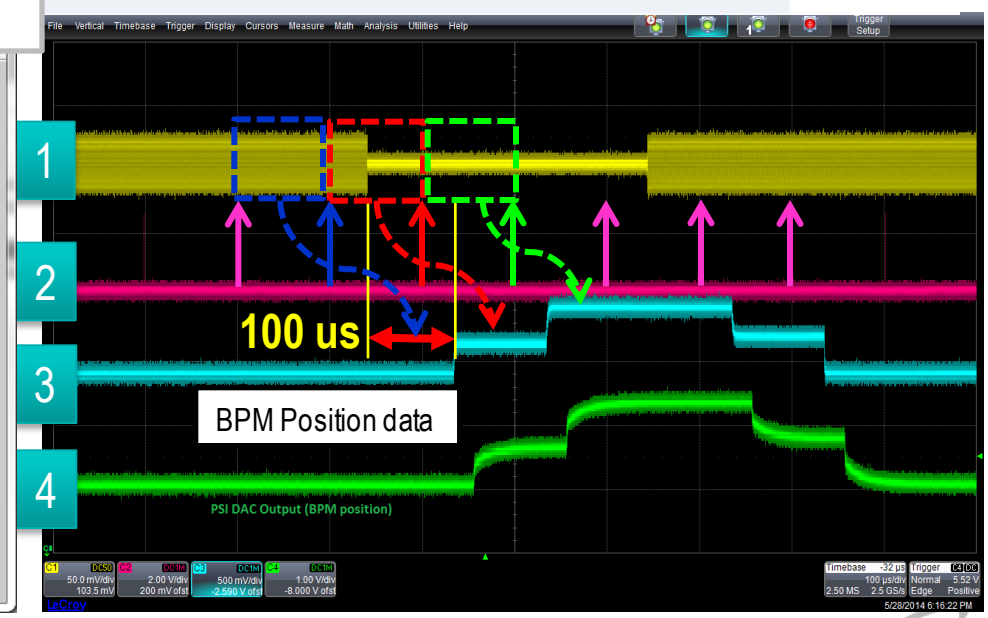

PSD/RMS beam motion measurement

Integrated RMS motion in frequency range 1-500Hz, plotted for 12 BPMs in one super-cell (C02 and C03).

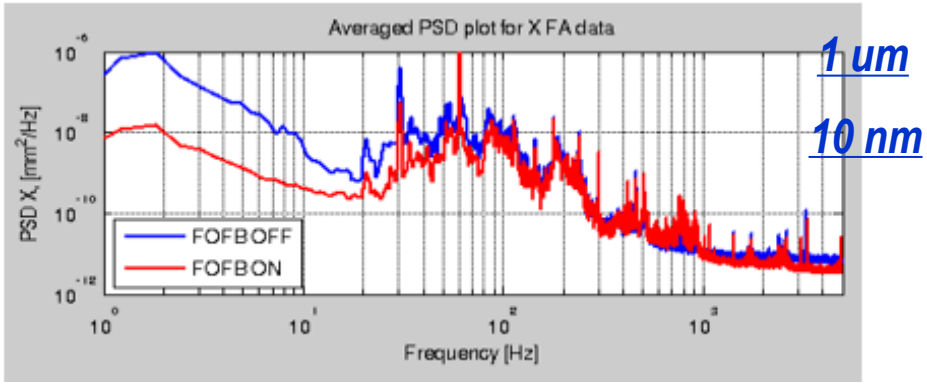

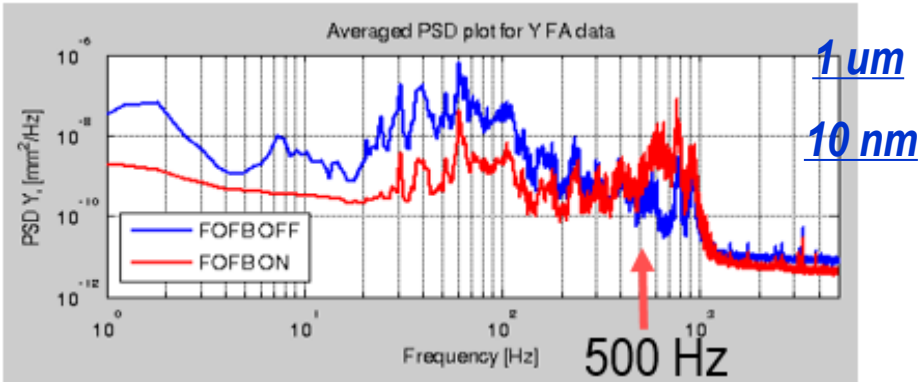

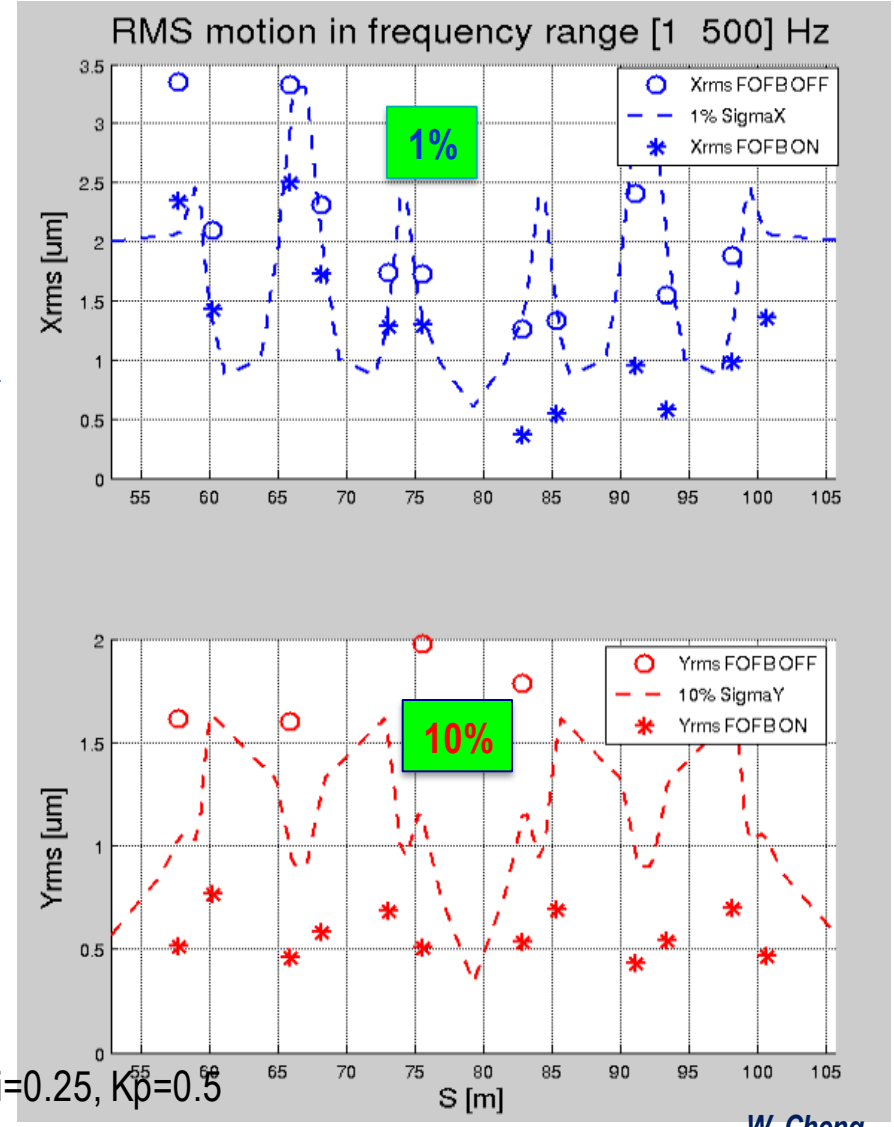

180 BPMs, 16384 points of FFT

Average PSD excluding dispersive BPMs, 40 Eignemode, Ki=0.25, Kp=0.5

W. Cheng

→ With FOFB on, RMS motions in both H and V plane meet the specifications (dashed lines).

Top-off injection mode test

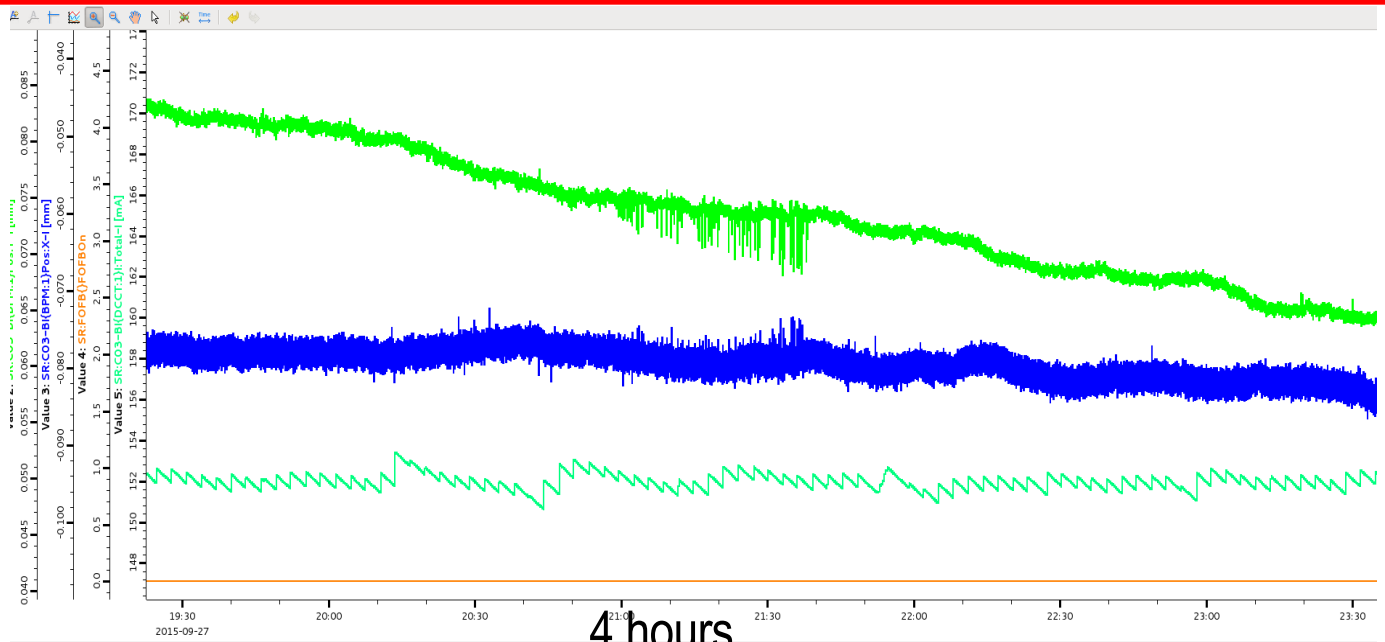

Without feedback

< 1 %

4 hours

With feedback

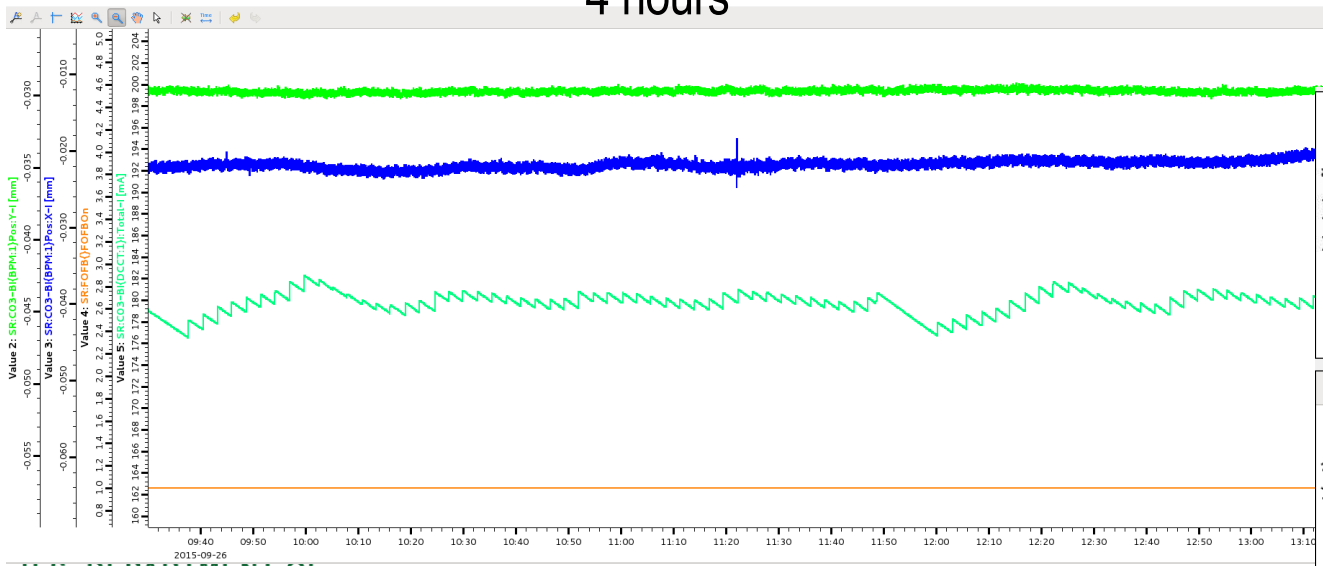

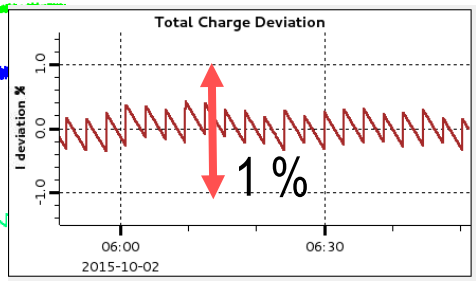

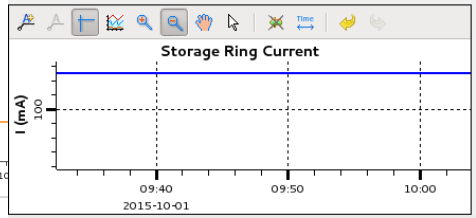

Summary

- Run FOFB user operation since May 2015
- The long term drift was less than 4 um(H) / 1 um(V) during 15 hours.
- BPM SA data shows the orbit stability was improved a factor of 7 to 10.
- BPM FA data shows the noise suppression **up to 400 Hz**.
- The integrated orbit noise is less than 10 % of beam size.

- Measured open loop system transfer function and system latency
- Run top-off injection mode at 250 mA operation

- Continues study that optimization and operation procedure

Thank you for your attention!

Questions and comments are welcome.

Acknowledgments

- BPM/ Cell controller development :

  Kurt Vetter
  Joseph Mead
  Alfred Dellapenna
  Joseph De Long
  Om Singh

- PSC and PS design:

  Wing Louie
  John Ricciardelli
  George Ganetis