First Lasing with an Echo-enabled Free-electron Laser

Zhentang Zhao for the SDUV-FEL team,
Shanghai Institute of Applied Physics, CAS, China

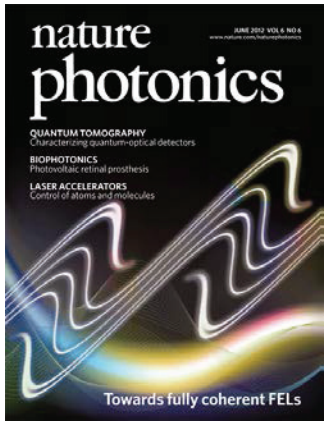

Outline

- Introduction to the SDUV-FEL
- First lasing with EEHG-FEL
- Summary and Outlook

SDUV-FEL Test Facility

- Shanghai Deep-Ultraviolet FEL (SDUV-FEL) is a seeded FEL test facility with multifold capabilities;
- Funded partially by
  - Chinese Academy of Sciences/CAS
  - Ministry of Science and Technology of China/MOST
  - Chinese Natural Science Foundation of /NSFC
- Collaborating institutes and universities include USTC, IHEP, THU;
- A test bed for novel FEL concepts and key technologies for future XFELs.

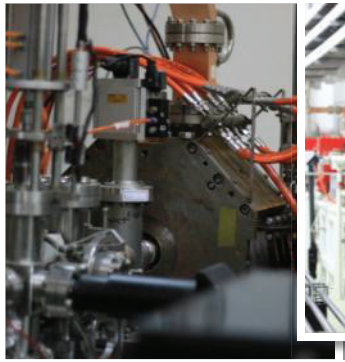
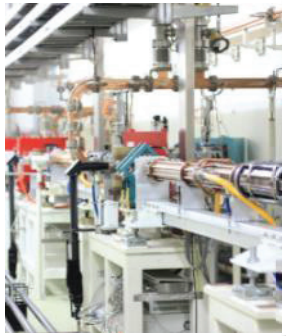
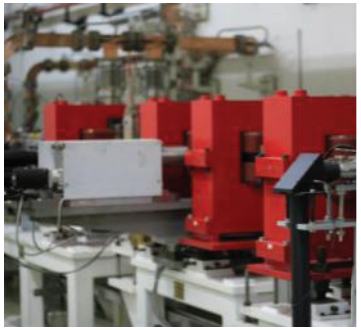
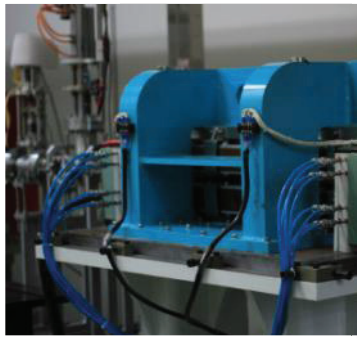


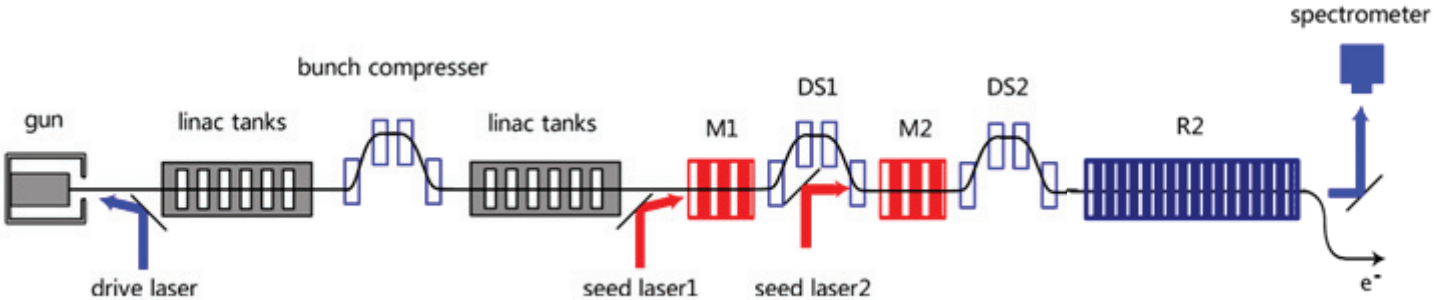

SDUV: a seeded FEL principle test bench

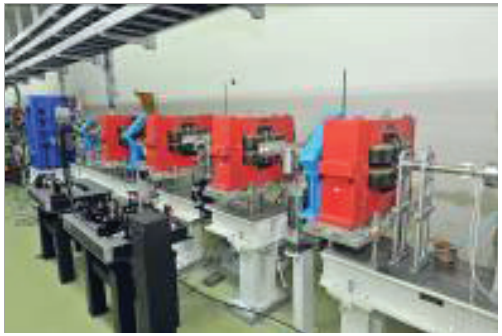


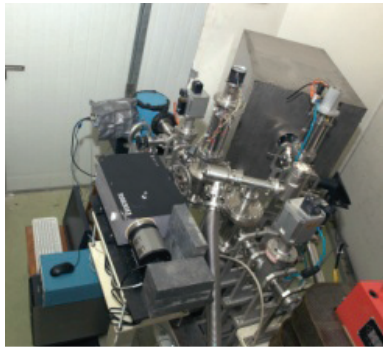

Milestones of FEL Exps. @ SDUV-FEL

- 2009.09-12: SASE lasing
- 2010.05: Seeded FEL experiments start
- 2010.05.17: HGHG signal
- 2010.05.22: First Echo signal ('double-peak')
- 2010.07-08: Install. for high harmonics EEHG
- 2010.12: HGHG saturation
- 2011. 04: First EEHG-FEL lasing
- 2011.07-08: Cascaded HGHG experiments
- 2011.12: HGHG wide tuning experiments
- 2012.04: First cascaded HGHG signal
- 2013.07-08: EEHG at higher harmonics

EEHG Principle

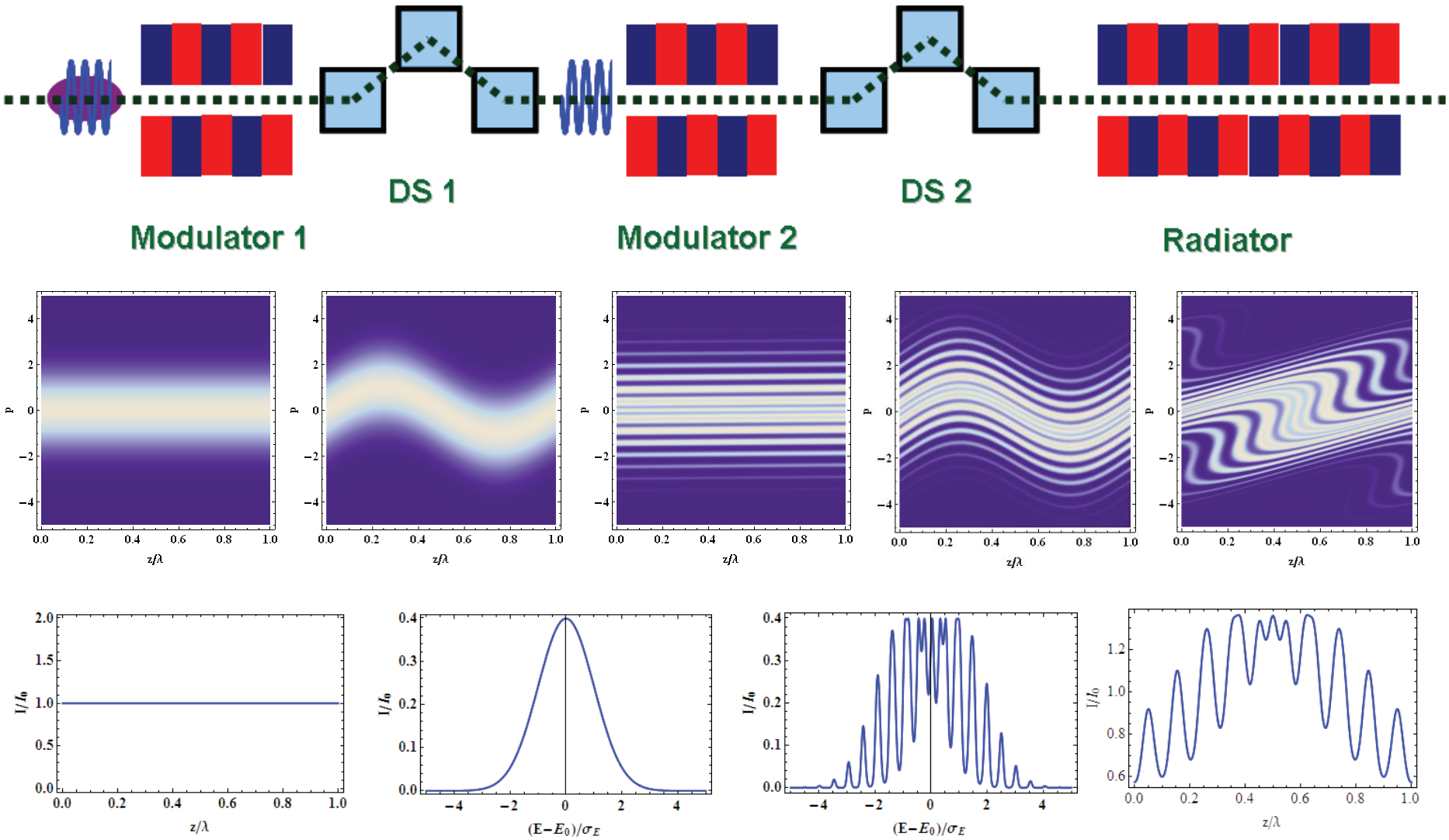

G. Stupakov, PRL 102, 074801 (2009)

EEHG Setup @ SDUV-FEL

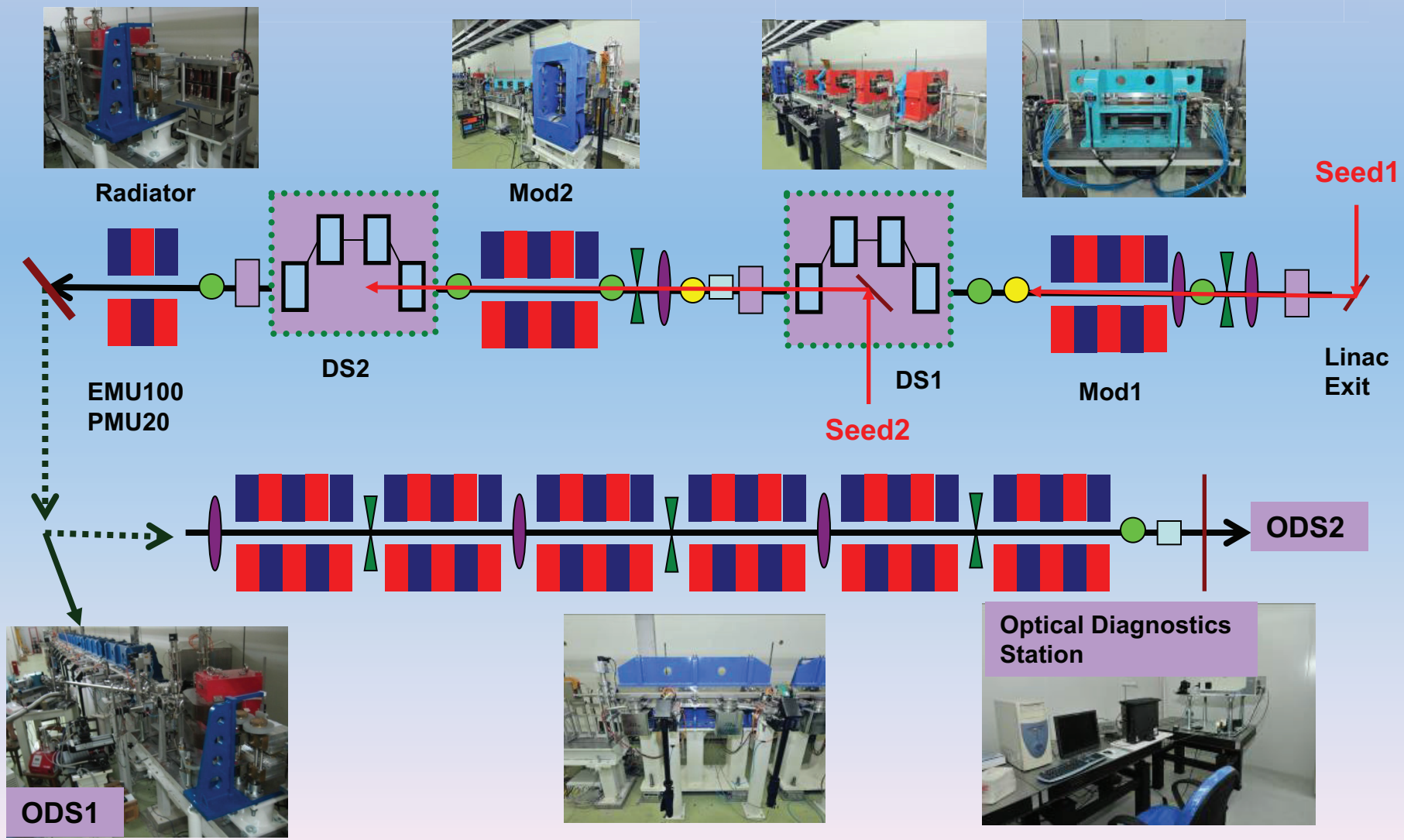


10/11/2009

Main Parameters of SDUV-FEL

Beam energy	100-150MeV
Beam energy spread (projected)	<0.03%
Normalized emittance	4~5mm-mrad
Bunch Length (rms)	2~8ps
Bunch charge	100~300pC
Seed laser wavelength	1047nm
Seed laser pulse length	8ps
Seed laser Power	100~200uJ

Linac Performance of SDUV-FEL

- 100~150MeV
- 4~5mm.mrad
- ……

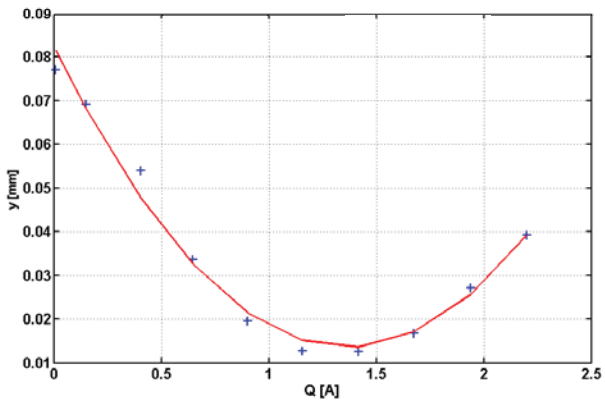

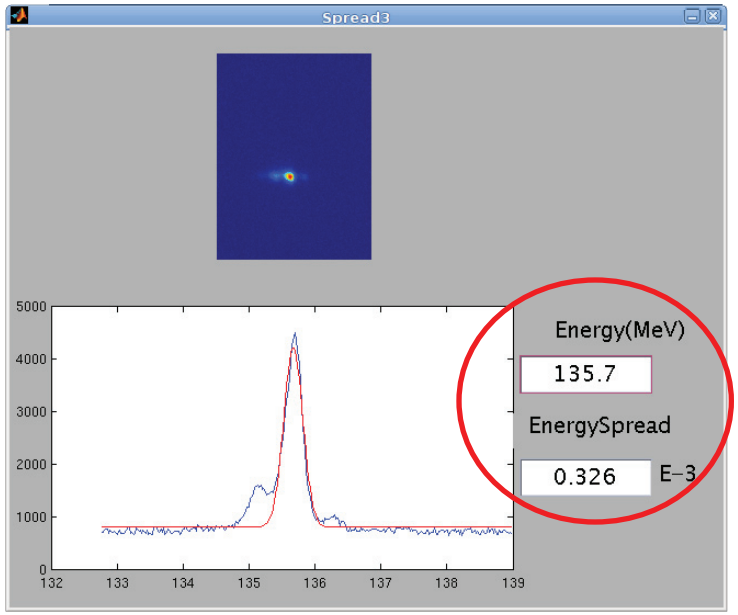

SDUV FEL Undulators

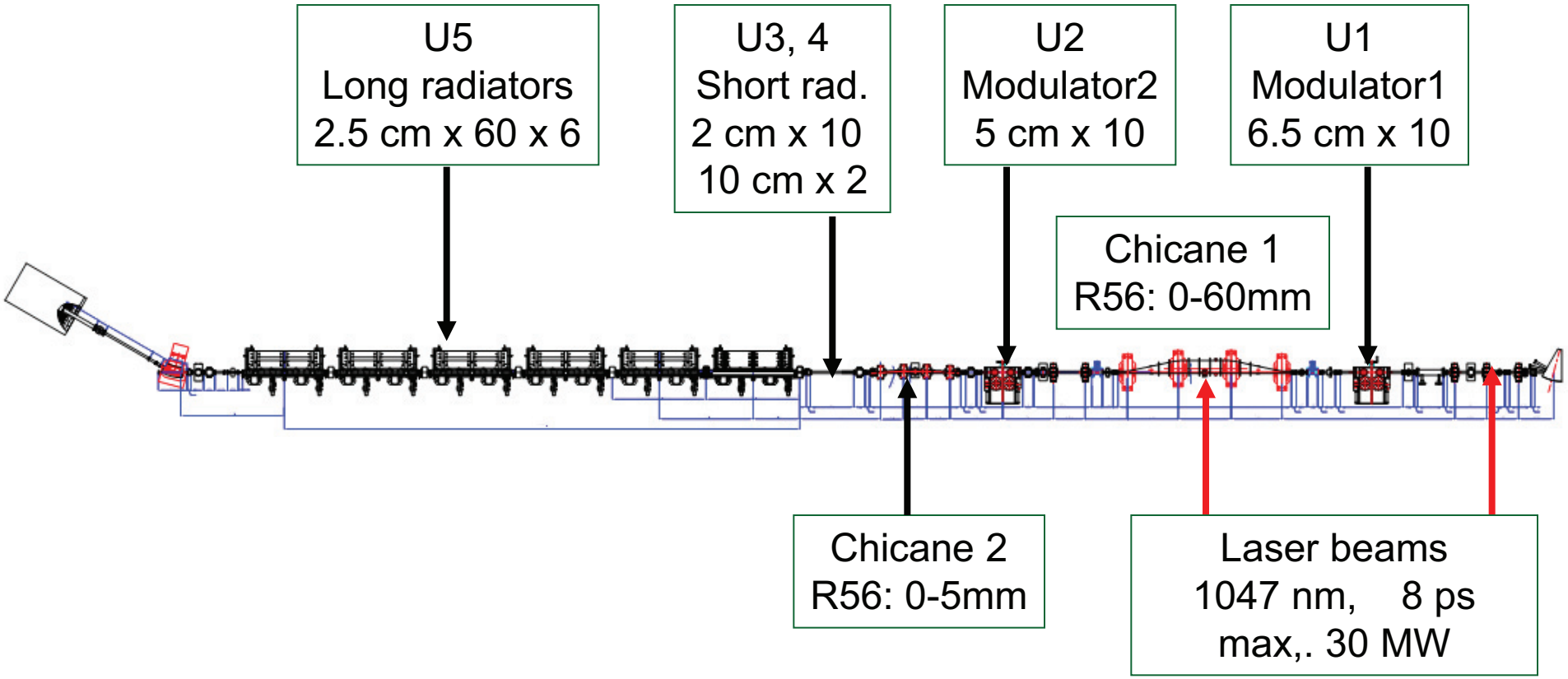

Overlap of laser and electron bunch

- Laser pulse: 8ps (FWHM)
- Electron bunch: 2 ~ 8ps
- Timing jitter is NOT an issue
- Injection with small angle is OK.

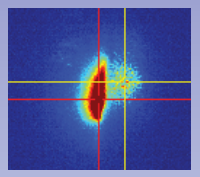

transverse overlap

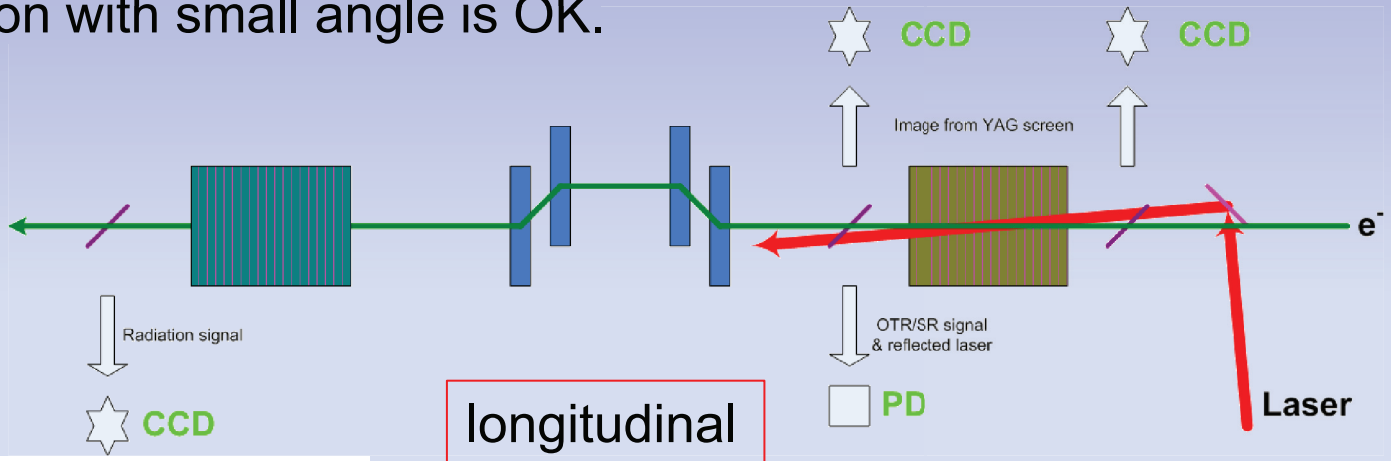

longitudinal overlap

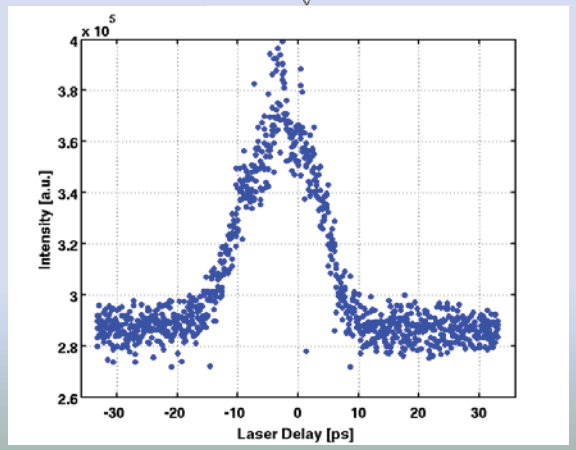

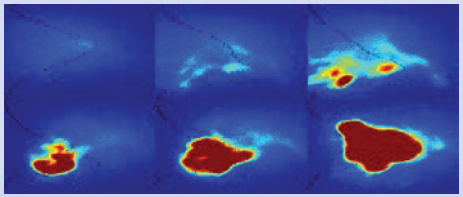

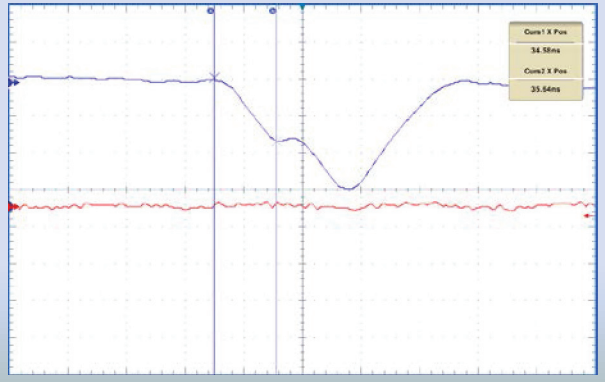

Slice energy spread measurement based on CHG

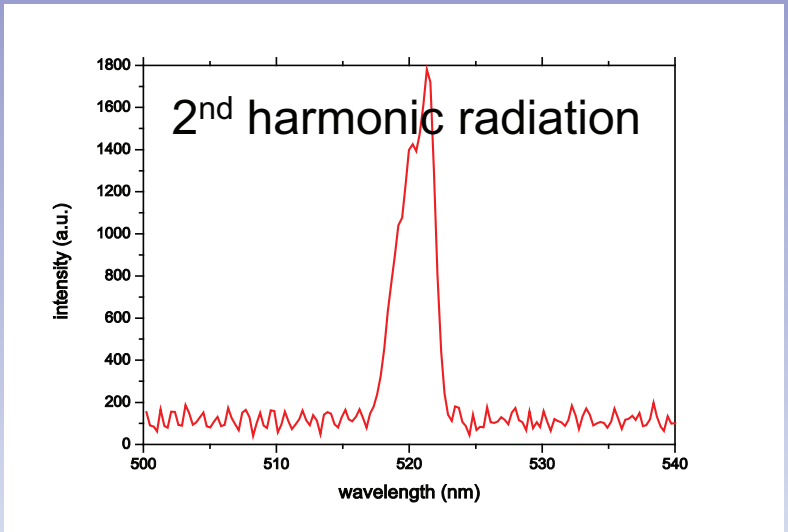

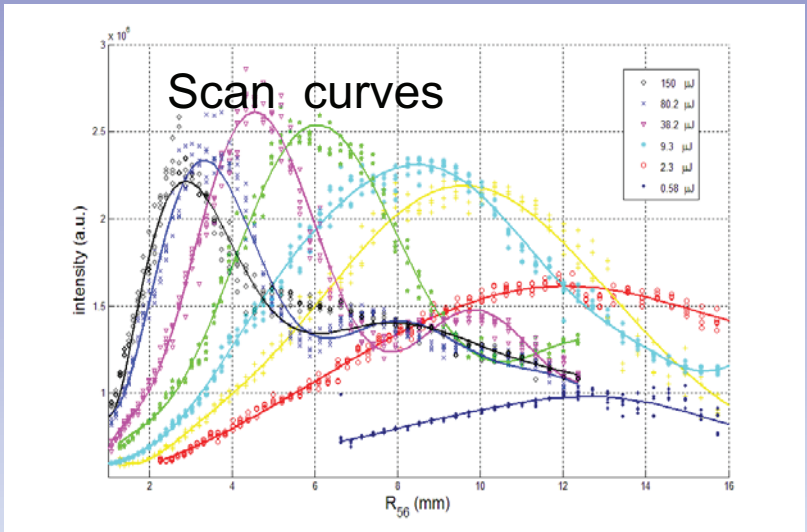

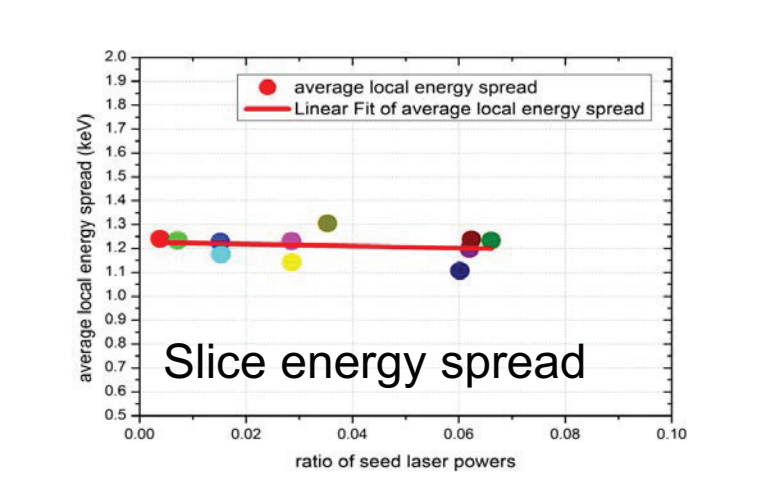

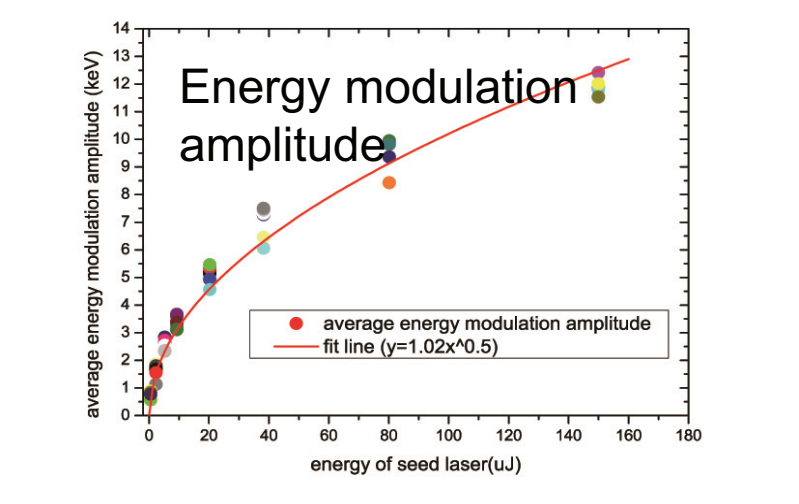

Chao Feng, et al., Phys. Rev. ST Accel. Beams , 14, 090701 (2011). (outstanding PRST paper of 2011)

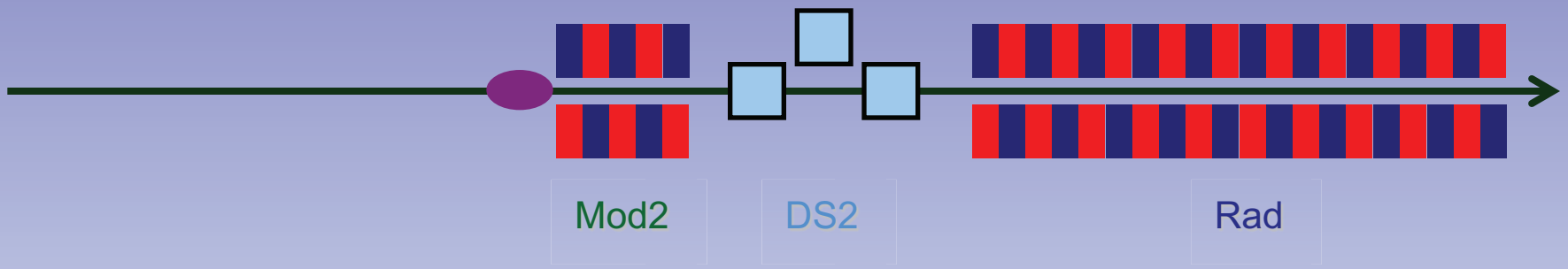

Lasing process of EEHG-FEL

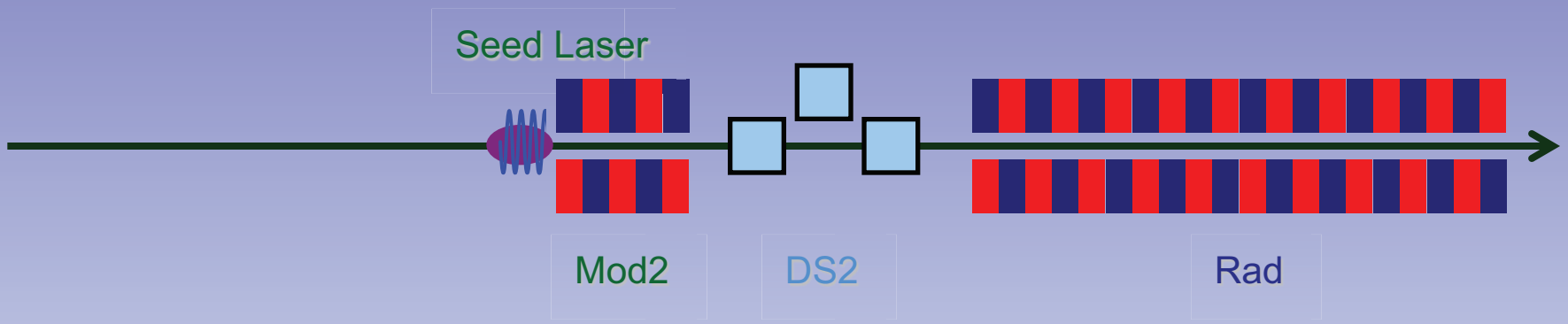

Lasing process of EEHG-FEL

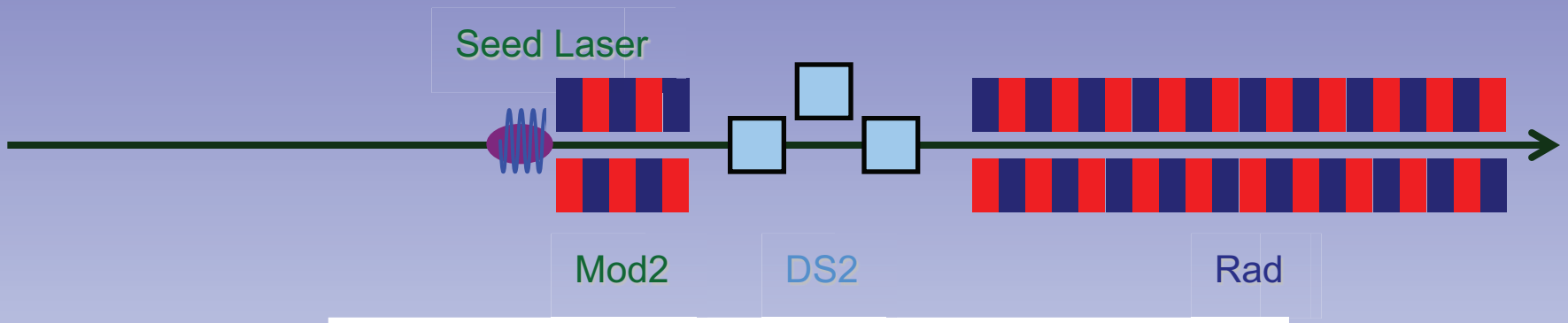

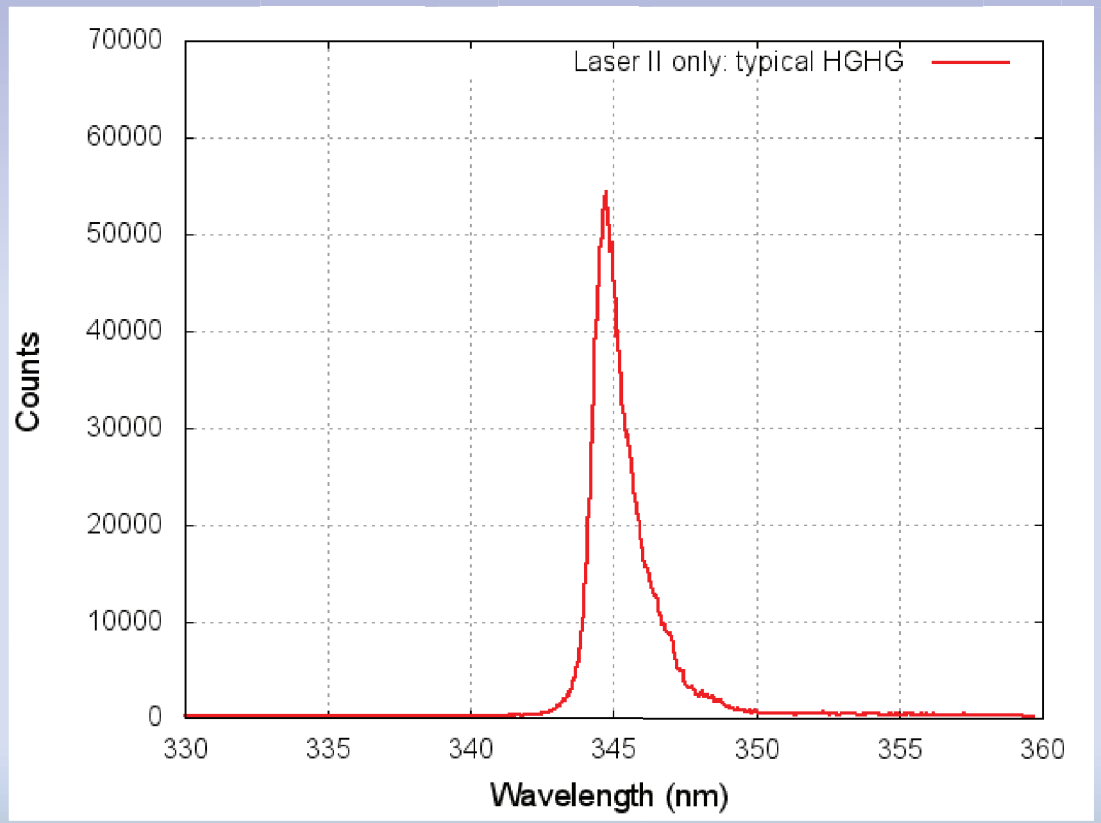

Lasing process of EEHG-FEL

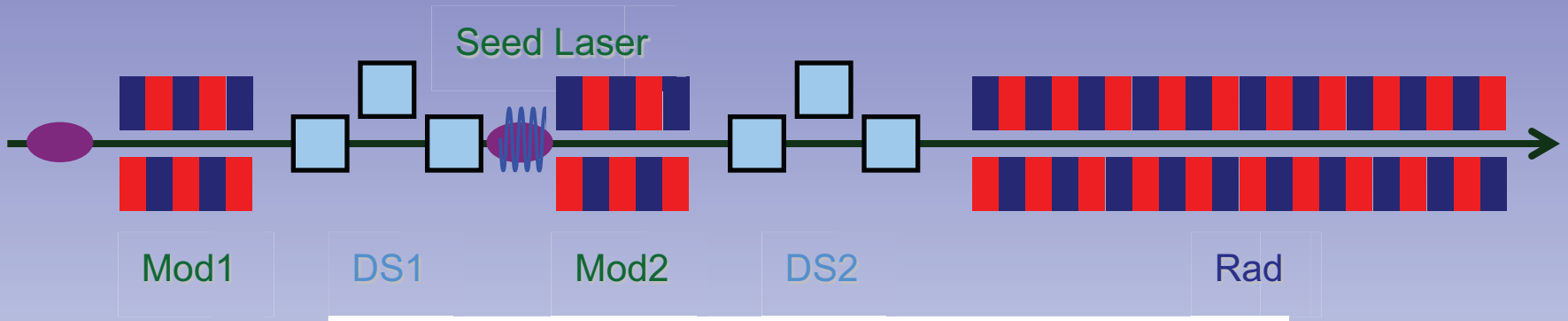

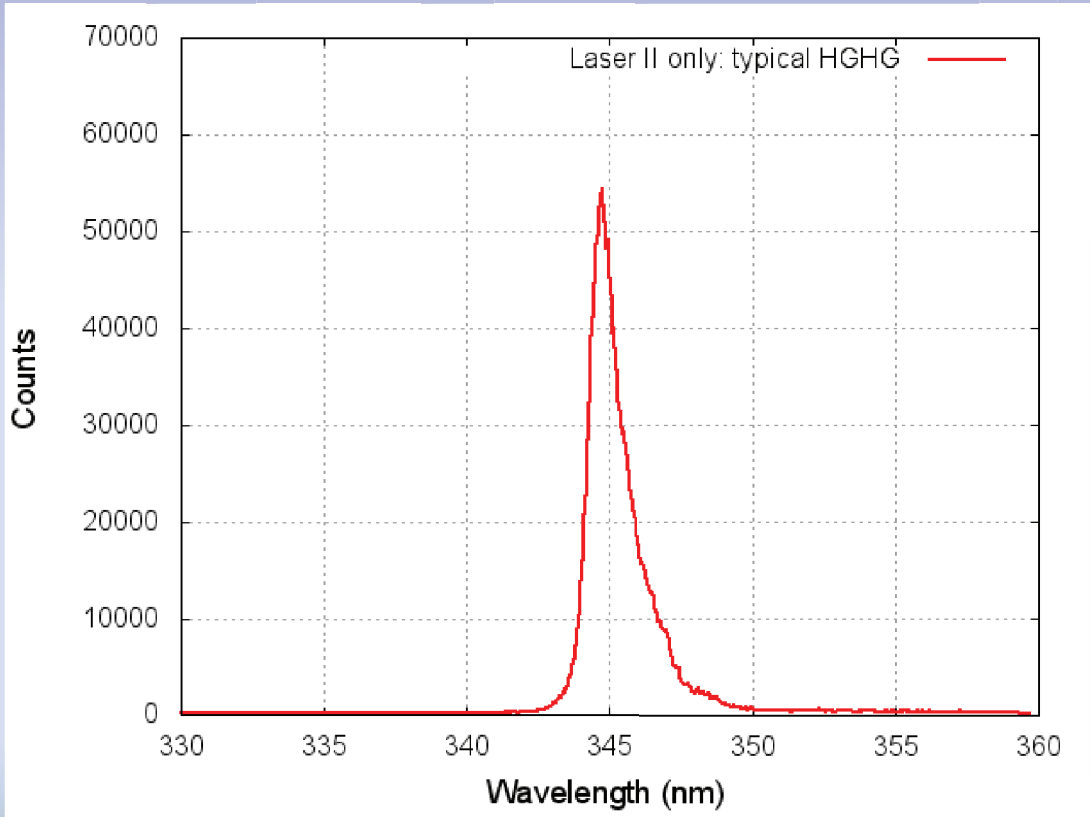

Lasing process of EEHG-FEL

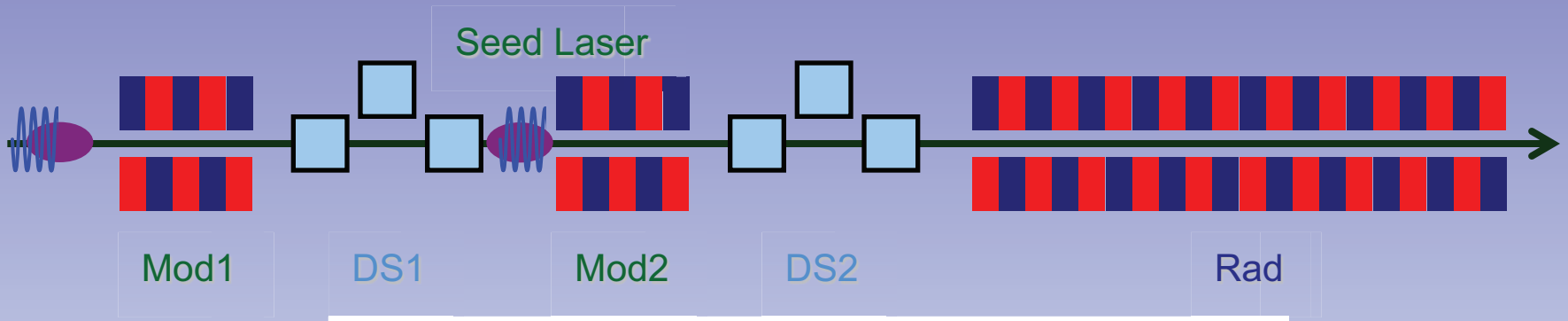

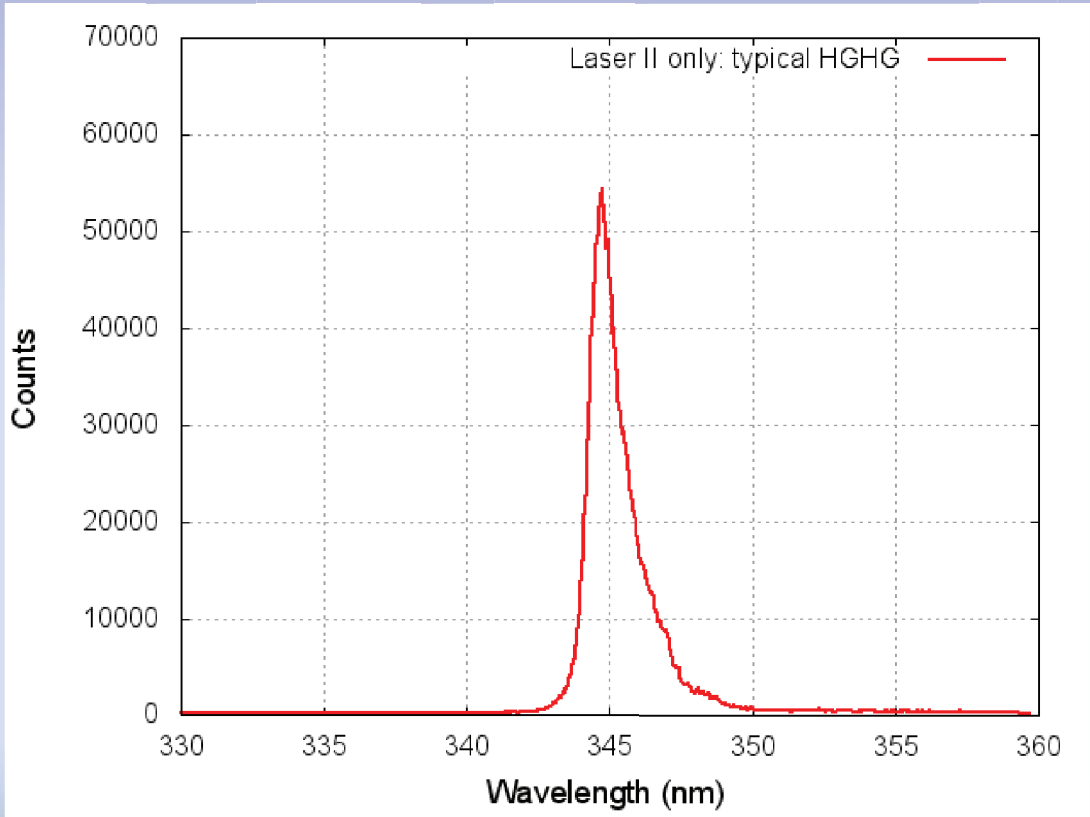

Lasing process of EEHG-FEL

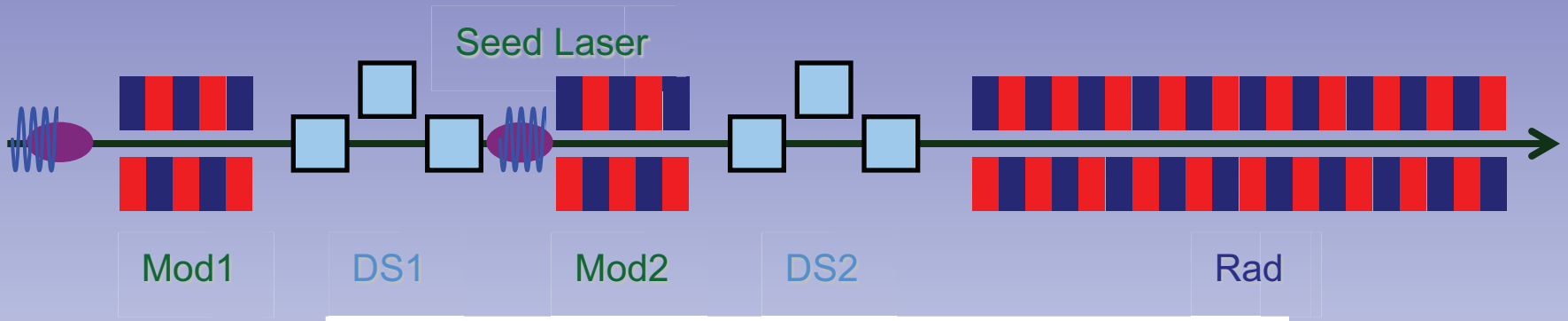

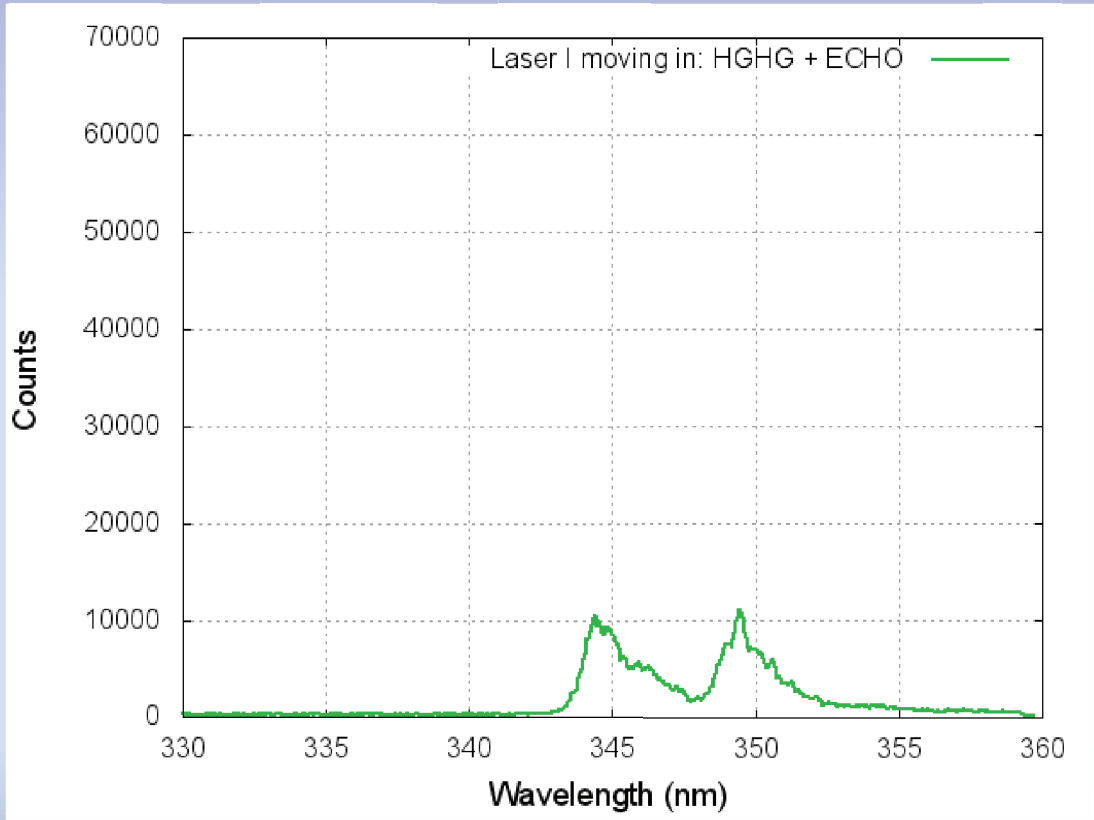

Lasing process of EEHG-FEL

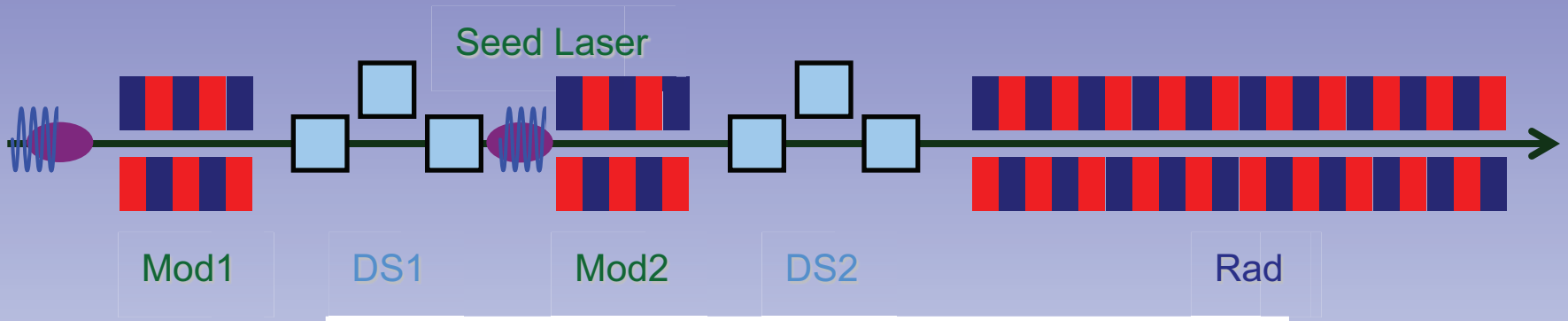

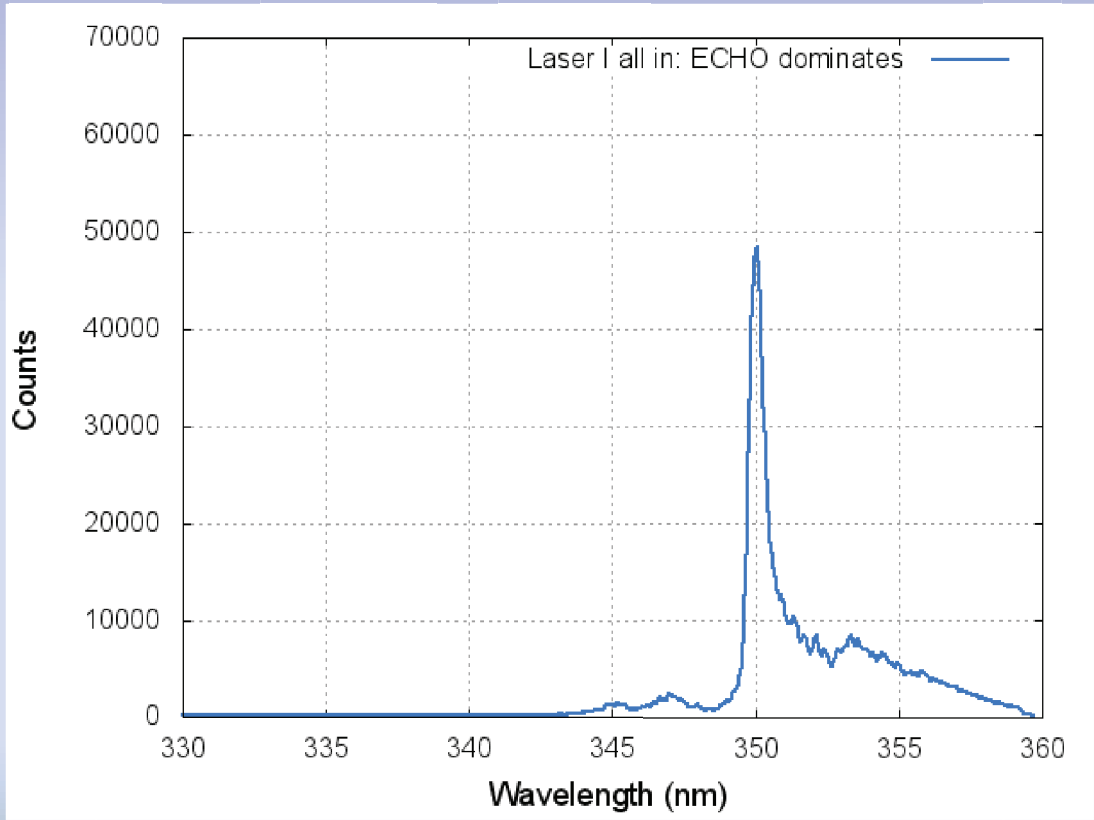

Lasing process of EEHG-FEL

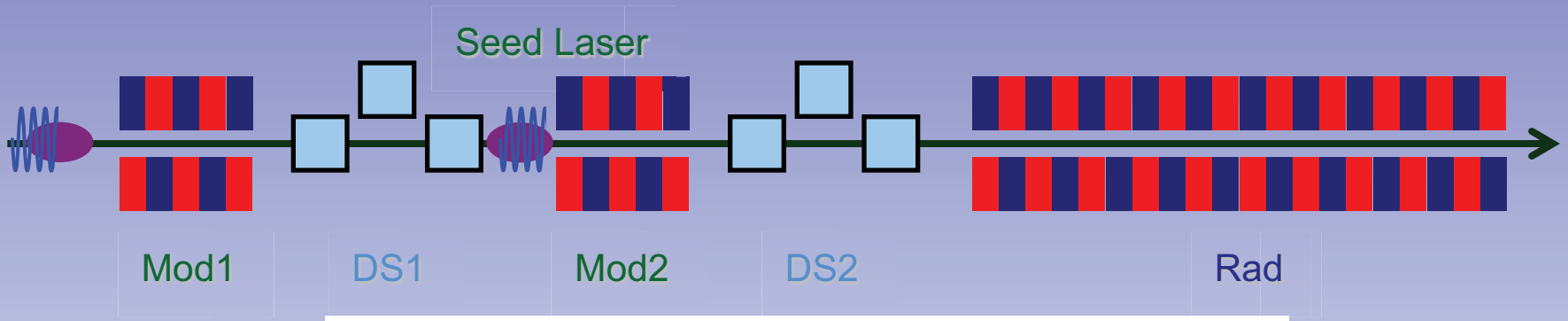

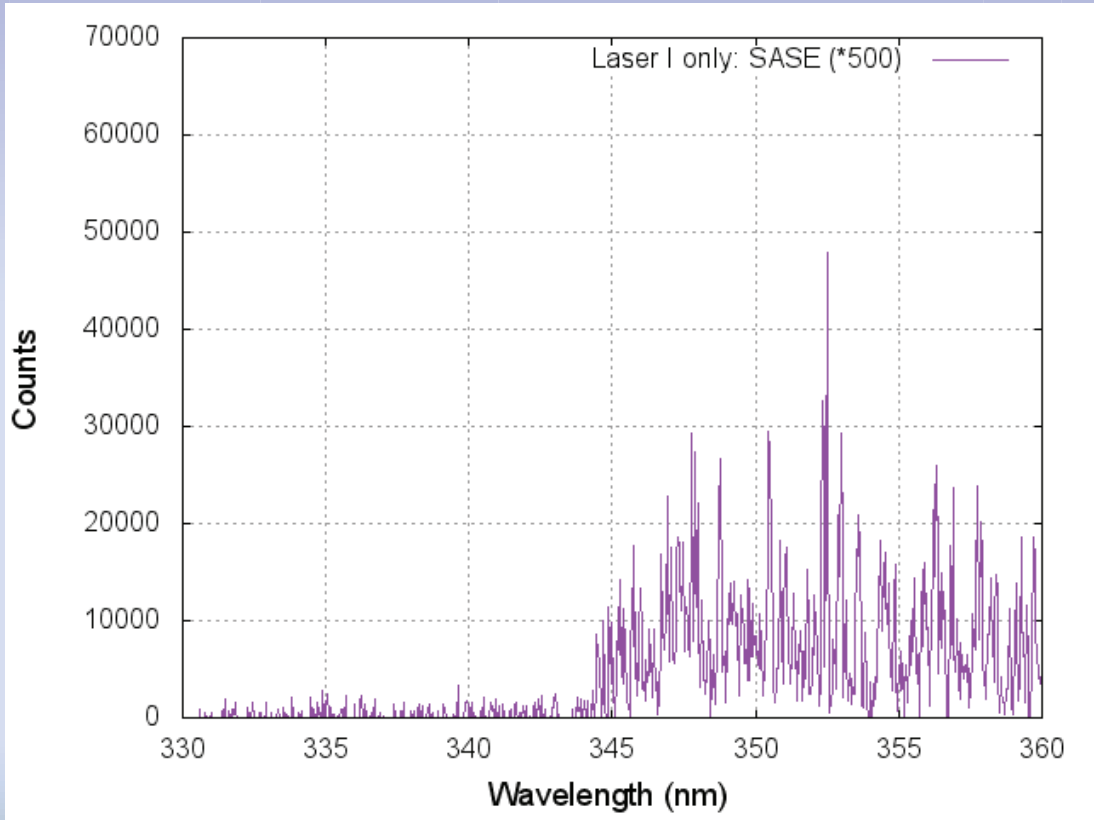

Lasing process of EEHG-FEL

First lasing of an EEHG-FEL

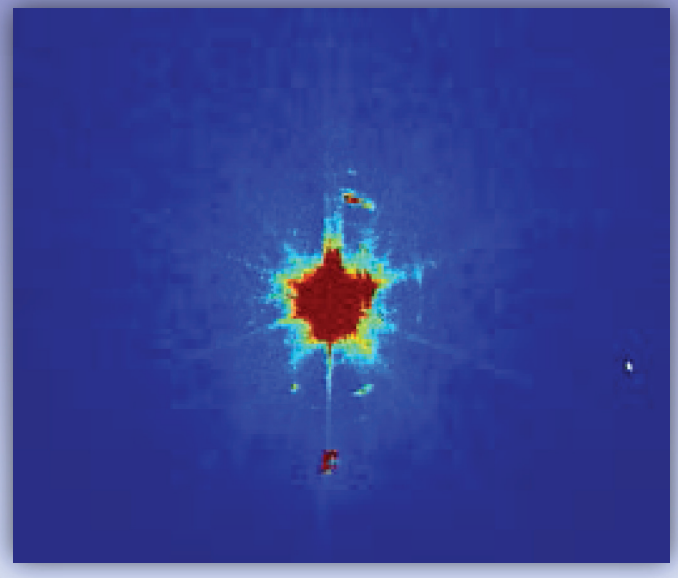

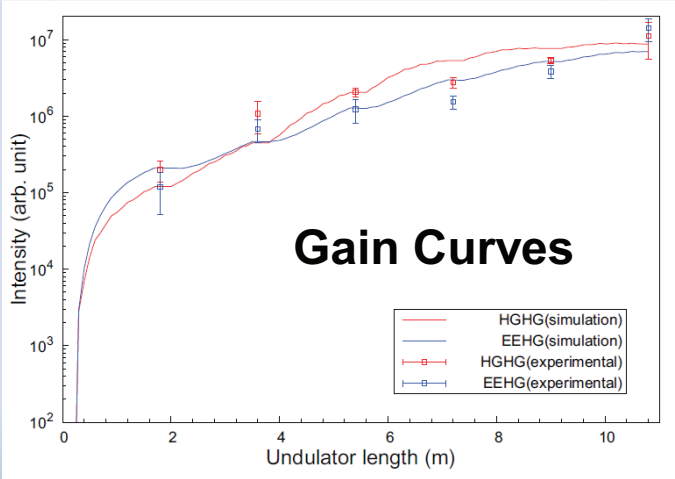

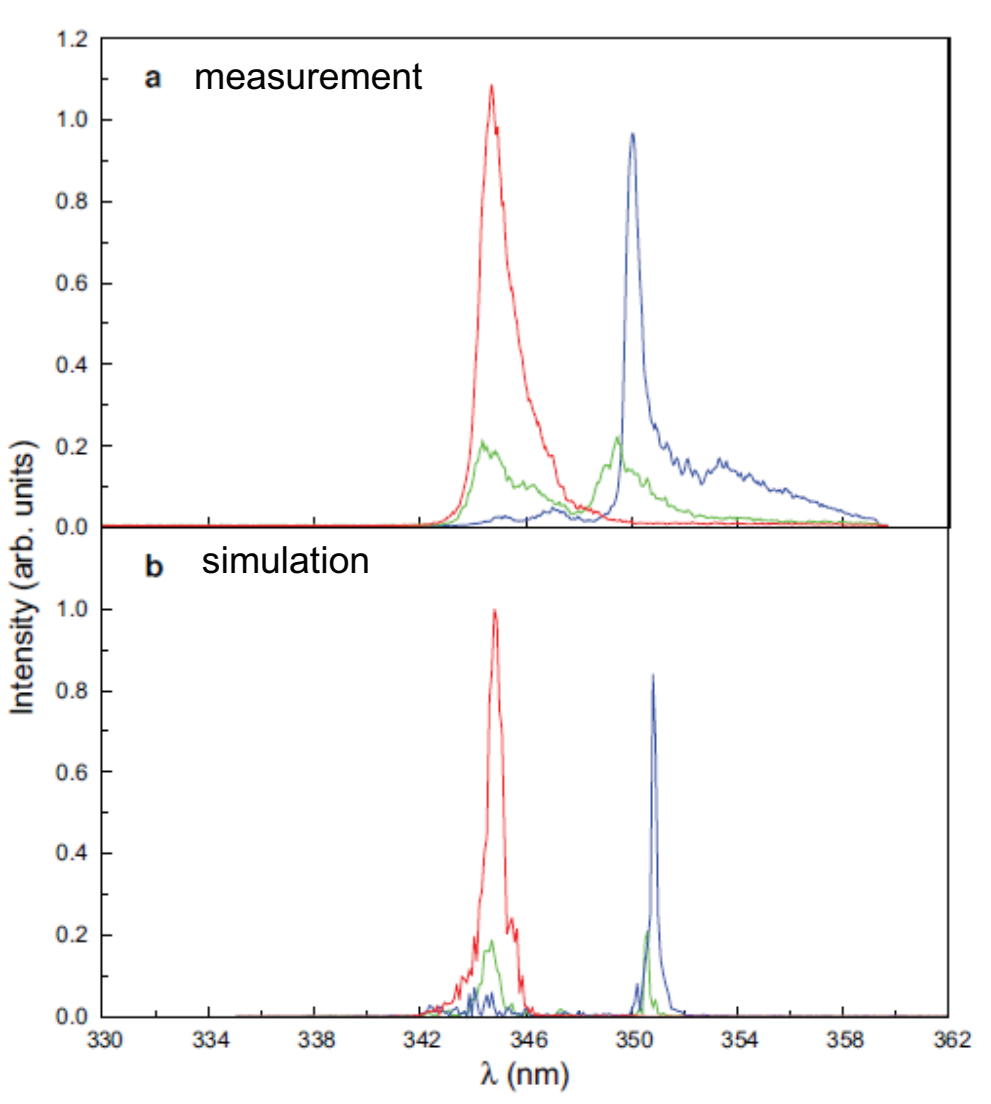

Z.T. Zhao et al., Nature photonics 6, 360 (2012)

First lasing of an EEHG-FEL

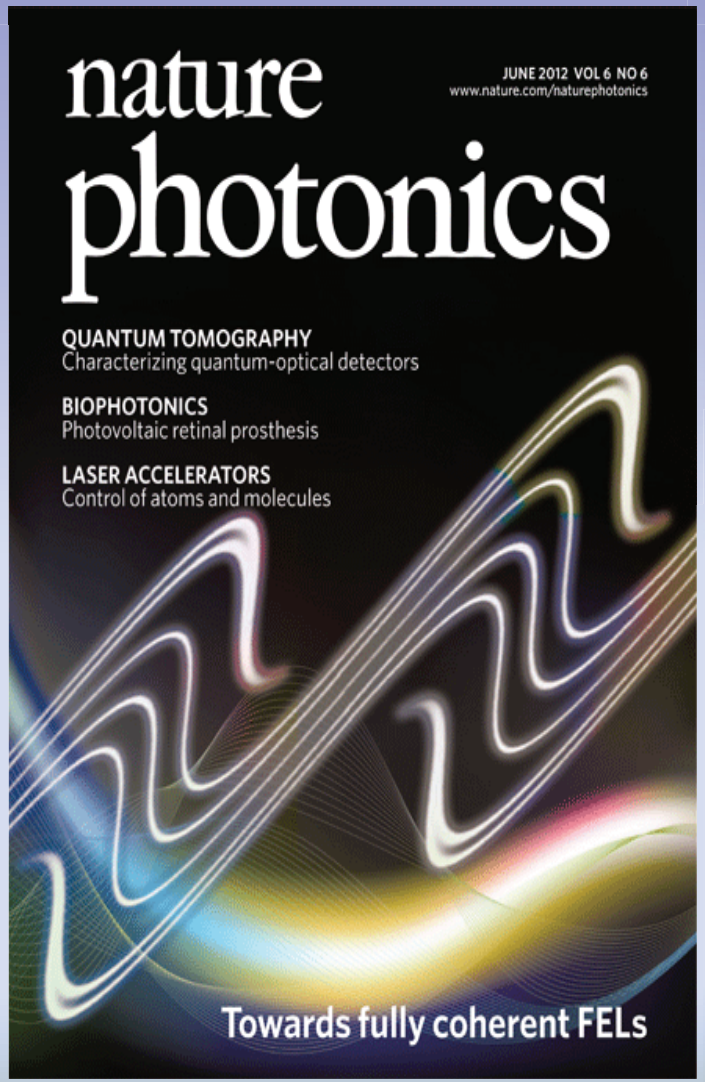

LETTERS
PUBLISHED ONLINE: 13 MAY 2012 | DOI: 10.1038/NPHOTON.2012.105
nature photonics

First lasing of an echo-enabled harmonic generation free-electron laser

Z. T. Zhao[1]*, D. Wang[1], J. H. Chen[1], Z. H. Chen[1], H. X. Deng[1], J. G. Ding[1], C. Feng[1], Q. Gu[1], M. M. Huang[1], T. H. Lan[1], Y. B. Leng[1], D. G. Li[1], G. Q. Lin[1], B. Liu[1], E. Prat[2], X. T. Wang[1], Z. S. Wang[1], K. R. Ye[1], L. Y. Yu[1], H. O. Zhang[1], J. Q. Zhang[1], Me. Zhang[1], Mi. Zhang[1], T. Zhang[1], S. P. Zhong[1] and Q. G. Zhou[1]

interview

Towards full-coherence FELs

Zhentang Zhao from the Shanghai Institute of Applied Physics spoke with *Nature Photonics* about how he and his co-workers achieved first lasing in an echo-enabled harmonic generation free-electron laser.

What is your work about?
We have experimentally demonstrated first lasing from an echo-enabled harmonic generation (EEHG) free-electron laser (FEL) — a feat that could lead to the development of full-coherence FELs with short wavelengths and very high intensities. We performed our work using the Shanghai deep ultraviolet free-electron laser (SDUV-FEL) at the Shanghai Institute of Applied Physics (SINAP), which consists of a 135.4 MeV electron accelerator and an amplifier composed of a series of undulator magnets. The EEHG concept was first proposed in 2009 by Gennady Stupakov, a distinguished accelerator physicist at the

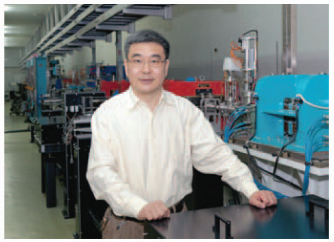
WEICHENG HU

Zhentang Zhao inside the SDUV-FEL facility, where first lasing of the EEHG FEL scheme was demonstrated.

What are the potential applications and challenges of your technique?
Given its advantage of remarkable upconversion efficiency at higher harmonics, the EEHG scheme is promising for generating fully coherent radiation at soft-X-ray wavelengths from conventional lasers that have only a single seeding stage. Such full-coherence X-ray pulses will benefit many applications, including soft-X-ray resonant inelastic scattering, spectroscopic studies of correlated electron materials, and holographic, diffractive or lensless imaging. The challenges lie in demonstrating EEHG at very high harmonics, where its advantages over other

Z.T. Zhao et al., Nature photonics 6, 360 (2012)

Summary and Outlook

- First lasing of an EEHG-FEL at the SDUV-FEL has been successfully demonstrated;
- Overlap of electron beam and seed laser transversely, temporally and spectrally, and precise measurement of local electron beam energy spread are key techniques;
- EEHG experiments at higher harmonic and other further considerations are in progress **(THOANO04)**


Thank you for your attention
谢谢！
AURORA